LOT 5 BLOCK C OAKHAVEN S/D.
843-1358, 923-2, 969-2331, 969-2

LORENZO CIERA/LORENZO RYAN
249 NW LIVE OAK PL
LAKE CITY, FL 32055

2026

12-3S-15-00167-034

COLUMBIA COUNTY PROPERTY

BUILDING CHARACTERISTICS

ELEMENT	CD	CONSTRUCTION
Exterior Wall	19	COMMON BRK 60
Exterior Wall	31	VINYL SID 40
Roof Structur	08	IRREGULAR 100
Roof Cover	12	MODULAR MT 100
Interior Wall	05	DRYWALL 100
Interior Floo	14	CARPET 80
Interior Floo	15	HARDTILE 20
Air Condition	03	CENTRAL 100
Heating Type	04	AIR DUCTED 100
Bedrooms		3 100
Bathrooms		2 100
Frame	01	NONE 100
Stories	1.	1. 100
Architectual	05	CONV 100
Units		0 100
Condition Adj	03	03 100
Kitchen Adjus	01	01 100
Quality	07	07
DOR CODE	0100	SINGLE FAMILY
MAP NUM		MKT AREA 01
NEIGHBORHOOD/LOC	12315.010	1.00/

AREA TYPE	TOTAL GROSS AREA	PCT OF BASE	YEAR	TOT ADJ AREA	SUBAREA MARKET VALUE
BAS	650	100		650	63,128
BAS	2,208	100		2,208	214,440
FDG	1,181	60		709	68,857
FOP	336	30		101	9,809
FSP	394	40		158	15,345
TOTALS	4,769			3,826	371,579

MARKET ADJUSTMENTS

TYPE	MDL	EFF. AREA	TOT ADJ PTS	EFF. BASE RATE	REPL. COST NEW	AYB	EYB	ECON	FNCT		NORM	% COND
0100	01	3,826	123.3452	138.15	528,562	1998	1998	0	0	0	29.70	70.30

1 SINGLE FAM 67% - 2022 Heated Area: 2858 HX Base Yr 2022

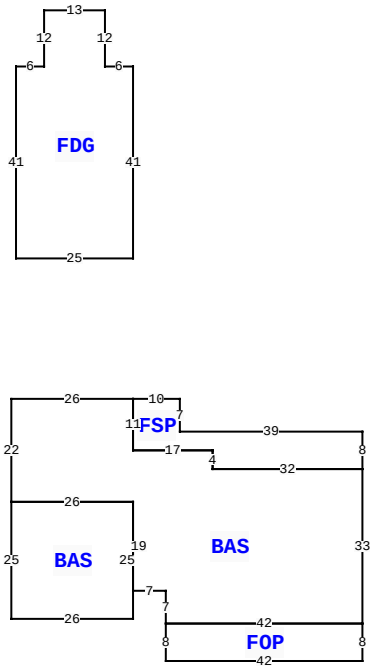

249 NW LIVE OAK PL, LAKE CITY

BLD DATE		LGL DATE	
XF DATE		LAND DATE	04/07/2025 MLU
INC DATE		AG DATE	

VALUATION SUMMARY

VALUATION BY		STANDARD
Tax Group: 3	Tax Dist:	
BUILDING MARKET VALUE		371,579
TOTAL MARKET OB/XF VALUE		57,240
TOTAL LAND VALUE - MARKET		46,750
TOTAL MARKET VALUE		475,569
SOH/AGL Deduction		19,514
ASSESSED VALUE		456,055
TOTAL EXEMPTION VALUE	HA HAB	50,722
BASE TAXABLE VALUE		405,333
TOTAL JUST VALUE		475,569
NCON VALUE		0
INCOME VALUE		
PREVIOUS YEAR MKT VALUE		483,162

PERMIT NUM	DESCRIPTION	AMT	ISSUED
000050051	Electrical Servic	0	06/05/2024
41129	ELECTRICAL		01/08/2021
29249	POOL ENCL	135	03/18/2011
29145	POOL	295	01/27/2011
028688	ADDN SFR	195	06/24/2010
13184	SFR	345	10/14/1997

SALES DATA

OFF RECORD Number	DATE	TYPE INST	Q U	V I	RSN CD	SALE PRICE
1515/464	5/14/2024	LE	U	I	14	100
GRANTOR: LEVY ERIC (ENH LE)						
GRANTEE: LEVY FAMILY TRUST D						
1421/0813	9/19/2020	WD	Q	I	01	370,000
GRANTOR: DAVID M & TANYA SMITH						
GRANTEE: CIERA &RYAN LORENZO						

BUILDING NOTES

BUILDING DIMENSIONS

BAS=[ORIG=0,0] W26 S22 E26 S19 E7 S7 E42 N33 W32 N4 W17 N11 $
FDG=[ORIG=0,-30] N41 W6 N12 W13 S12 W6 S41 E25 $
BAS=[ORIG=-26,22] S25 E26 N25 W26 $
FSP=[ORIG=49,15] N8 W39 N7 W10 S11 E17 S4 E32 $
FOP=[ORIG=7,48] S8 E42 N8 W42 $.

EXTRA FEATURES

LN	OB/XF CODE	DESCRIPTION	BLD	CAP	L	W	UNITS	UT	Adj R	ADJ UNIT PRICE	ORIG COND	YEAR ON	YEAR ACTUAL	Q	% COND	OB/XF MKT VALUE	NOTES
1	0166	CONC,PAVMT	0	67	0	0	781.00	UT	1.50	1.50	100	1998	1998	3	100	1,172	
2	0280	POOL R/CON	0	67	16	44	704.00	UT	70.00	70.00	100	2011	2011	3	68	33,510	
3	0282	POOL ENCL	0	67	29	67	1,943.00	UT	15.00	15.00	100	2011	2011	3	40	11,658	
4	0169	FENCE/WOOD	0	67	0	0	1.00	UT	3,500.00	3,500.00	100	2021	2020		100	3,500	
5	0030	BARN,MT	0	100	0	0	1.00	UT	2,000.00	2,000.00	100	2023	2022		100	2,000	
6	0104	GENERATOR	0	100	0	0	1.00	UT	6,000.00	6,000.00	100	2025	2024		90	5,400	

LAND DESCRIPTION

TOTAL OB/XF 57,240

LN	USE CODE	CLS	LAND USE DESCRIPTION	CAP	RD	LOC ZONE	FRONT	DEPTH	TOT LND UTS	UNIT TYPE	DT	DPTH FACT	% COND	TOT ADJ	UNIT PRICE	ADJ UNIT PRICE	LAND VALUE	OTHER ADJUSTMENTS AND NOTES	YEAR	DENSITY	DECL	FRZ	YR	CONSRV
1	0100	C	SFR	67		A-1	0.00	0.00	1.00	LT		1.00	1.00	0.85	55,000.00	46,750.00	46,750							

REVIEW DATE 12/02/2024 BY TW Total Acres: 4.01 Total Land Value: 46,750 Market: 0 Agricultural: 0 Common: 46,750 PRINTED 10/02/2025 BY SYS