LOT 1 BLOCK B OAKHAVEN S/D.
822-933, 939-2187, LE 1540-2268,

BOUTWELL GEORGE A/BOUTWELL LINDA J
389 NW INDIAN SPRINGS DRIVE
LAKE CITY, FL 32055

2026

12-3S-15-00167-016

COLUMBIA COUNTY PROPERTY

BUILDING CHARACTERISTICS

ELEMENT	CD	CONSTRUCTION
Exterior Wall	19	COMMON BRK 90
Exterior Wall	05	AVERAGE 10
Roof Structur	08	IRREGULAR 100
Roof Cover	03	COMP SHNGL 100
Interior Wall	05	DRYWALL 100
Interior Floo	12	HARDWOOD 50
Interior Floo	14	CARPET 50
Air Condition	03	CENTRAL 100
Heating Type	04	AIR DUCTED 100
Bedrooms		3 100
Bathrooms		2.5 100
Frame	01	NONE 100
Stories	1.	1. 100
Architectual	05	CONV 100
Units		0 100
Condition Adj	03	03 100
Kitchen Adjus	01	01 100
Quality	07	07
DOR CODE	0100	SINGLE FAMILY
MAP NUM		MKT AREA 01
NEIGHBORHOOD/LOC	12315.010	1.00/

AREA TYPE	TOTAL GROSS AREA	PCT OF BASE	YEAR	TOT ADJ AREA	SUBAREA MARKET VALUE
BAS	2,068	100		2,068	208,094
FDG	1,147	60		688	69,230
FGR	572	55		315	31,697
FOP	70	30		21	2,113
FSP	160	40		64	6,440
FST	52	55		29	2,918
PTO	130	5		6	604
TOTALS	4,199			3,191	321,097

MARKET ADJUSTMENTS

TYPE	MDL	EFF. AREA	TOT ADJ PTS	EFF. BASE RATE	REPL. COST NEW	AYB	EYB	ECON	FNCT		NORM	% COND
0100	01	3,191	126.0127	141.13	450,346	1997	1997	0	0	0	28.70	71.30

1 SINGLE FAM 100% - 2005 Heated Area: 2068 HX Base Yr 2005

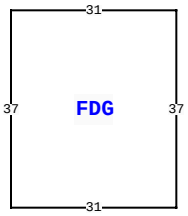

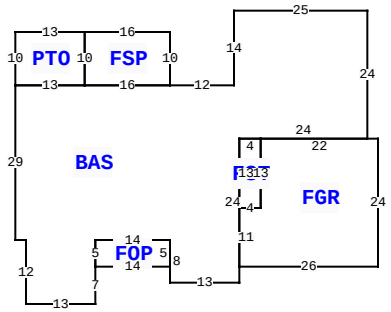

389 NW INDIAN SPRINGS DR, LAKE CITY

BLD DATE		LGL DATE	
XF DATE		LAND DATE	04/07/2025 MLU
INC DATE		AG DATE	

EXTRA FEATURES

LN	OB/XF CODE	DESCRIPTION	BLD	CAP	L	W	UNITS	UT	Adj R	ADJ UNIT PRICE	ORIG COND	YEAR ON	YEAR ACTUAL	Q	% COND	OB/XF MKT VALUE	NOTES
1	0190	FPLC PF	0	100	0	0	1.00	UT	1,200.00	1,200.00	100	1997	1997	3	100	1,200	
2	0166	CONC,PAVMT	0	100	0	0	549.00	UT	1.50	1.50	100	1997	1997	3	100	824	
3	0280	POOL R/CON	0	100	0	0	566.00	UT	70.00	70.00	100	2017	2017	3	84	33,281	
4	0282	POOL ENCL	0	100	32	40	1,280.00	UT	15.00	15.00	100	2017	2017	3	57	10,944	
5	0104	GENERATOR	0	100	0	0	1.00	UT	6,000.00	6,000.00	100	2021	2020		70	4,200	
6	0260	PAVEMENT-A	0	100	0	0	1.00	UT	2,000.00	2,000.00	100	2023	2022		100	2,000	

VALUATION SUMMARY

VALUATION BY		STANDARD
Tax Group: 3	Tax Dist:	
BUILDING MARKET VALUE		321,097
TOTAL MARKET OB/XF VALUE		52,449
TOTAL LAND VALUE - MARKET		57,750
TOTAL MARKET VALUE		431,296
SOH/AGL Deduction		135,043
ASSESSED VALUE		296,253
TOTAL EXEMPTION VALUE	HX HB VX	55,722
BASE TAXABLE VALUE		240,531
TOTAL JUST VALUE		431,296
NCON VALUE		0
INCOME VALUE		
PREVIOUS YEAR MKT VALUE		437,557

PERMIT NUM	DESCRIPTION	AMT	ISSUED
000049393	Roof Replacement	19,000	03/11/2024
39869	REMODEL	0	06/03/2020
35265	POOL ENCL	119	05/04/2017
34919	POOL	300	02/07/2017
30338	MAINT/ALTR	45	08/02/2012
25590	GARAGE	271	03/02/2007

SALES DATA

OFF RECORD Number	DATE	TYPE INST	Q U	V I	RSN CD	SALE PRICE
1540/2268	4/22/2025	LE	U	I	14	100
GRANTOR: BOUTWELL GEORGE A (EN						
GRANTEE: BOUTWELL GEORGE A I						
0939/2187	10/22/2001	WD	Q	I		160,000
GRANTOR: JAMES C & LAURA L SAY						
GRANTEE: GEORGE A & LINDA BO						

BUILDING NOTES

BUILDING DIMENSIONS

BAS=[ORIG=0,0] W25 S14 W12 W16 W13 S29 E2 S12 E13 N7 N5 E14 S8 E13 N3 N24 E24 N24 $
FDG=[ORIG=0,-30] N37 W31 S37 E31 $
FGR=[ORIG=-24,48] E26 N24 W22 S13 W4 S11 $
FSP=[ORIG=-37,14] N10 W16 S10 E16 $
PTO=[ORIG=-53,14] N10 W13 S10 E13 $
FOP=[ORIG=-51,48] E14 N5 W14 S5 $
FST=[ORIG=-20,24] W4 S13 E4 N13 $
.

LAND DESCRIPTION

TOTAL OB/XF 52,449

LN	USE CODE	CLS	LAND USE DESCRIPTION	CAP	RD	LOC ZONE	FRONT	DEPTH	TOT LND UTS	UNIT TYPE	DT	DPTH FACT	% COND	TOT ADJ	UNIT PRICE	ADJ UNIT PRICE	LAND VALUE	OTHER ADJUSTMENTS AND NOTES	YEAR	DENSITY	DECL	FRZ	YR	CONSRV
1	0100	C	SFR	100		A-1	0.00	0.00	1.00	LT		1.00	1.00	1.05	55,000.00	57,750.00	57,750							

REVIEW DATE 02/24/2025 BY jerry Total Acres: 4.52 Total Land Value: 57,750 Market: 0 Agricultural: 0 Common: 57,750 PRINTED 11/17/2025 BY SYS