LOT 13 BLOCK A OAKHAVEN S/D.

867-2495, 988-521, 988-523, LE 1

KAPTAIN PETER D
692 NW INDIAN SPRINGS DR
LAKE CITY, FL 32055

2026

12-3S-15-00167-014

COLUMBIA COUNTY PROPERTY

BUILDING CHARACTERISTICS

ELEMENT	CD	CONSTRUCTION
Exterior Wall	31	VINYL SID 100
Roof Structur	08	IRREGULAR 100
Roof Cover	03	COMP SHNGL 100
Interior Wall	05	DRYWALL 100
Interior Floo	14	CARPET 70
Interior Floo	15	HARDTILE 30
Air Condition	03	CENTRAL 100
Heating Type	04	AIR DUCTED 100
Bedrooms		3 100
Bathrooms		2 100
Frame	02	WOOD FRAME 100
Stories	1.	1. 100
Architectual	05	CONV 100
Units		0 100
Condition Adj	03	03 100
Kitchen Adjus	01	01 100
Quality	07	07
DOR CODE	0100	SINGLE FAMILY
MAP NUM		MKT AREA 01
NEIGHBORHOOD/LOC	12315.010	1.00/

AREA TYPE	TOTAL GROSS AREA	PCT OF BASE	YEAR	TOT ADJ AREA	SUBAREA MARKET VALUE
BAS	2,882	100		2,882	273,570
FDG	1,800	60		1,080	102,518
FGR	420	55		231	21,927
FOP	288	30		86	8,163
FSP	961	40		384	36,451
TOTALS	6,351			4,663	442,629

MARKET ADJUSTMENTS

TYPE	MDL	EFF. AREA	TOT ADJ PTS	EFF. BASE RATE	REPL. COST NEW	AYB	EYB	ECON	FNCT		NORM	% COND
0100	01	4,663	114.9159	128.71	600,175	2004	2004	0	0	0	26.25	73.75

1 SINGLE FAM 100% - 2005 Heated Area: 2882 HX Base Yr 2005

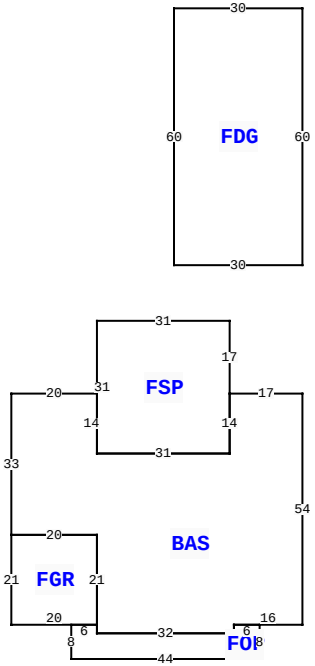

692 NW INDIAN SPRINGS DR, LAKE CITY

BLD DATE		LGL DATE	
XF DATE		LAND DATE	04/07/2025 MLU
INC DATE		AG DATE	

VALUATION SUMMARY

VALUATION BY		STANDARD
Tax Group: 3	Tax Dist:	
BUILDING MARKET VALUE		442,629
TOTAL MARKET OB/XF VALUE		5,174
TOTAL LAND VALUE - MARKET		68,750
TOTAL MARKET VALUE		516,553
SOH/AGL Deduction		166,237
ASSESSED VALUE		350,316
TOTAL EXEMPTION VALUE	HX HB	50,722
BASE TAXABLE VALUE		299,594
TOTAL JUST VALUE		516,553
NCON VALUE		0
INCOME VALUE		
PREVIOUS YEAR MKT VALUE		524,055

PERMIT NUM	DESCRIPTION	AMT	ISSUED
000052278	Roof Replacement	11,200	02/10/2025
000051641	Roof Replacement	37,000	11/25/2024
22605	GARAGE	275	12/16/2004
21160	SFR	471	10/14/2003

SALES DATA

OFF RECORD Number	DATE	TYPE INST	Q U	V I	RSN CD	SALE PRICE
1521/1175	8/15/2024	LE	U	I	14	100
GRANTOR: KAPTAIN PETER D						
GRANTEE: KAPTAIN PETER D (EN						
0988/0523	6/30/2003	WD	Q	V		35,000
GRANTOR: TRUDY E INNES FKA TRU						
GRANTEE: PETER D KAPTAIN						

BUILDING NOTES

BUILDING DIMENSIONS

BAS=[ORIG=0,0] W17 S14 W31 N14 W20 S33 E20 S21 S2 E32 N2 E16 N54 $
FDG=[ORIG=0,-30] N60 W30 S60 E30 $
FSP=[ORIG=-17,0] N17 W31 S31 E31 N14 $
FGR=[ORIG=-68,33] S21 E20 N21 W20 $
FOP=[ORIG=-48,54] W6 S8 E44 N8 W6 S2 W32 N2 $
.

EXTRA FEATURES

LN	OB/XF CODE	DESCRIPTION	BLD	CAP	L	W	UNITS	UT	Adj R	ADJ UNIT PRICE	ORIG COND	YEAR ON	YEAR ACTUAL	Q	% COND	OB/XF MKT VALUE	NOTES
1	0166	CONC,PAVMT	0	100	0	0	1,087.00	UT	2.00	2.00	100	2004	2004	3	100	2,174	
2	0166	CONC,PAVMT	0	100	20	60	1,200.00	UT	2.50	2.50	100	2005	2005	3	100	3,000	

LAND DESCRIPTION

TOTAL OB/XF 5,174

LN	USE CODE	CLS	LAND USE DESCRIPTION	CAP	RD	LOC ZONE	FRONT	DEPTH	TOT LND UTS	UNIT TYPE	DT	DPTH FACT	% COND	TOT ADJ	UNIT PRICE	ADJ UNIT PRICE	LAND VALUE	OTHER ADJUSTMENTS AND NOTES	YEAR	DENSITY	DECL	FRZ	YR	CONSRV
1	0100	C	SFR	100		A-1	0.00	0.00	1.00	LT		1.00	1.00	1.25	55,000.00	68,750.00	68,750							

REVIEW DATE 02/17/2025 BY jerry Total Acres: 5.13 Total Land Value: 68,750 Market: 0 Agricultural: 0 Common: 68,750 PRINTED 11/17/2025 BY SYS