BEG SW COR OF LOT 7 BLOCK A OAKH II, N 310.68 FT TO NW COR OF LOT TO W R/W INDIAN POND DR, S ALONG

SMITH TERRY STEPHEN JR/SMITH AMELIA S
364 NW INDIAN POND CT
LAKE CITY, FL 32055

2026

12-3S-15-00166-003

COLUMBIA COUNTY PROPERTY

BUILDING CHARACTERISTICS

ELEMENT	CD	CONSTRUCTION
Exterior Wall	19	COMMON BRK 70
Exterior Wall	31	VINYL SID 30
Roof Structur	08	IRREGULAR 100
Roof Cover	03	COMP SHNGL 100
Interior Wall	05	DRYWALL 100
Interior Floo	14	CARPET 90
Interior Floo	08	SHT VINYL 10
Air Condition	03	CENTRAL 100
Heating Type	04	AIR DUCTED 100
Bedrooms		3 100
Bathrooms		2 100
Frame	01	NONE 100
Stories	1.	1. 100
Architectual	05	CONV 100
Units		0 100
Condition Adj	03	03 100
Kitchen Adjus	01	01 100
Quality	07	07
DOR CODE	0100	SINGLE FAMILY
MAP NUM		MKT AREA 01
NEIGHBORHOOD/LOC	12315.00	1.00/

AREA TYPE	TOTAL GROSS AREA	PCT OF BASE	YEAR	TOT ADJ AREA	SUBAREA MARKET VALUE
BAS	2,112	100		2,112	189,934
FOP	35	30		10	899
FSP	310	40		124	11,151
UDU	200	55		110	9,892
TOTALS	2,657			2,356	211,878

MARKET ADJUSTMENTS

TYPE	MDL	EFF. AREA	TOT ADJ PTS	EFF. BASE RATE	REPL. COST NEW	AYB	EYB	ECON	FNCT		NORM	% COND
0100	01	2,356	122.4036	137.09	322,984	1993	1993	0	0	0	34.40	65.60

1 SINGLE FAM 100% - 2024 Heated Area: 2112 HX Base Yr 2024

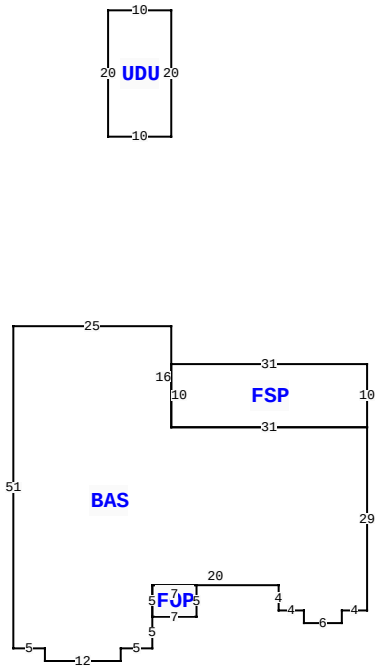

364 NW INDIAN POND CT, LAKE CITY

BLD DATE		LGL DATE	
XF DATE		LAND DATE	04/07/2025 MLU
INC DATE		AG DATE	

VALUATION SUMMARY

VALUATION BY		STANDARD
Tax Group: 3	Tax Dist:	
BUILDING MARKET VALUE		211,878
TOTAL MARKET OB/XF VALUE		1,900
TOTAL LAND VALUE - MARKET		48,932
TOTAL MARKET VALUE		262,710
SOH/AGL Deduction		44
ASSESSED VALUE		262,666
TOTAL EXEMPTION VALUE	HX HB	50,722
BASE TAXABLE VALUE		211,944
TOTAL JUST VALUE		262,710
NCON VALUE		0
INCOME VALUE		
PREVIOUS YEAR MKT VALUE		266,165

PERMIT NUM	DESCRIPTION	AMT	ISSUED

SALES DATA

OFF RECORD Number	DATE	TYPE INST	Q U	V I	RSN CD	SALE PRICE
1486/1394	3/15/2023	WD	Q	I	01	300,000
GRANTOR: HIZER JAMES E REVOCAB						
GRANTEE: SMITH TERRY STEPHEN						
1386/1293	5/31/2019	WD	U	I	30	100
GRANTOR: JAMES E HIZER						
GRANTEE: JAMES E HIZER TRUST						

BUILDING NOTES

BUILDING DIMENSIONS

BAS=[ORIG=0,0] W25 S51 E5 S2 E12 N2 E5 N5 N5 E20 S4 E4 S2 E6 N2 E4 N29 W31 N16 $
FSP=[ORIG=31,16] N10 W31 S10 E31 $
UDU=[ORIG=0,-30] N20 W10 S20 E10 $
FOP=[ORIG=-3,46] E7 N5 W7 S5 $
.

EXTRA FEATURES

LN	OB/XF CODE	DESCRIPTION	BLD	CAP	L	W	UNITS	UT	Adj R	ADJ UNIT PRICE	ORIG COND	YEAR ON	YEAR ACTUAL	Q	% COND	OB/XF MKT VALUE	NOTES
1	0169	FENCE/WOOD	0	100	0	0	1.00	UT	0.00	0.00	100	2005	2005	3	100	100	
2	0081	DECKING WI	0	100	0	0	1.00	UT	0.00	0.00	100	2016	2016	3	100	1,800	

LAND DESCRIPTION

TOTAL OB/XF 1,900

LN	USE CODE	CLS	LAND USE DESCRIPTION	CAP	RD	LOC ZONE	FRONT	DEPTH	TOT LND UTS	UNIT TYPE	DT	DPTH FACT	% COND	TOT ADJ	UNIT PRICE	ADJ UNIT PRICE	LAND VALUE	OTHER ADJUSTMENTS AND NOTES	YEAR	DENSITY	DECL	FRZ	YR	CONSRV
1	0100	C	SFR	100		A-1	0.00	0.00	3.62	AC		1.00	1.00	1.50	9,000.00	13,500.00	48,870							
2	9520	C	LAKE	100		A-1	0.00	0.00	2.50	AC		1.00	1.00	1.00	25.00	25.00	62							

REVIEW DATE 04/27/2023 BY ME Total Acres: 6.12 Total Land Value: 48,932 Market: 0 Agricultural: 0 Common: 48,932 PRINTED 11/19/2025 BY SYS