COMM SE COR OF NE1/4 OF NW1/4 OF
N 25.01 FT TO N R/W YOUNG RD, W
POB, W 341.84 FT, N 637.89 FT, E

STONE RALPH/STONE MICHELLE
263 SW WILLIAM YOUNG LN
LAKE CITY, FL 32024-5293

2026

11-5S-16-03578-000

COLUMBIA COUNTY PROPERTY

BUILDING CHARACTERISTICS

ELEMENT	CD	CONSTRUCTION
Exterior Wall	31	VINYL SID 100
Roof Structur	08	IRREGULAR 100
Roof Cover	03	COMP SHNGL 100
Interior Wall	05	DRYWALL 100
Interior Floo	14	CARPET 90
Interior Floo	15	HARDTILE 10
Air Condition	03	CENTRAL 100
Heating Type	04	AIR DUCTED 100
Bedrooms		3 100
Bathrooms		2.5 100
Frame	01	NONE 100
Stories	1.	1. 100
Architectual	05	CONV 100
Units		0 100
Condition Adj	04	04 100
Kitchen Adjus	01	01 100
Quality	05	05
DOR CODE	0100	SINGLE FAMILY
MAP NUM		MKT AREA 01
NEIGHBORHOOD/LOC	11516.00	1.00/

AREA TYPE	TOTAL GROSS AREA	PCT OF BASE	YEAR	TOT ADJ AREA	SUBAREA MARKET VALUE
BAS	288	100		288	25,575
BAS	1,872	100		1,872	166,236
FDU	288	60		173	15,363
FOP	48	30		14	1,244
PTO	264	5		13	1,155
TOTALS	2,760			2,360	209,571

MARKET ADJUSTMENTS

TYPE	MDL	EFF. AREA	TOT ADJ PTS	EFF. BASE RATE	REPL. COST NEW	AYB	EYB	ECON	FNCT		NORM	% COND
0100	01	2,360	119.6811	134.04	316,334	1998	1998	0	0	0	33.75	66.25

1 SINGLE FAM 0% - 2023 Heated Area: 2160 HX Base Yr

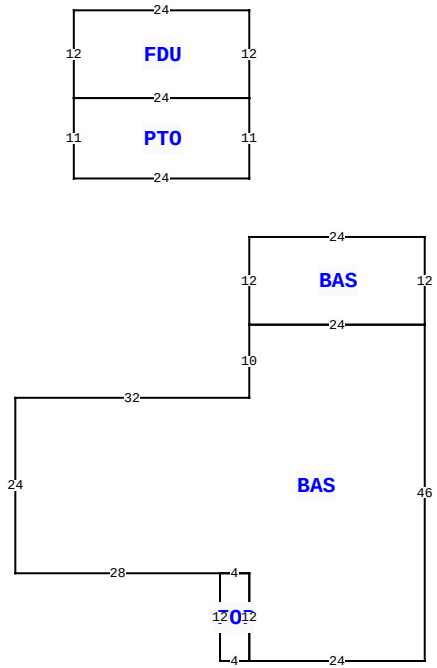

263 SW WILLIAM YOUNG LN, LAKE CITY

BLD DATE		LGL DATE	
XF DATE		LAND DATE	04/07/2025 MLU
INC DATE		AG DATE	

VALUATION SUMMARY

VALUATION BY	STANDARD
Tax Group: 3	Tax Dist:
BUILDING MARKET VALUE	209,571
TOTAL MARKET OB/XF VALUE	2,000
TOTAL LAND VALUE - MARKET	55,110
TOTAL MARKET VALUE	266,681
SOH/AGL Deduction	0
ASSESSED VALUE	266,681
TOTAL EXEMPTION VALUE	0
BASE TAXABLE VALUE	266,681
TOTAL JUST VALUE	266,681
NCON VALUE	0
INCOME VALUE	
PREVIOUS YEAR MKT VALUE	270,635

PERMIT NUM	DESCRIPTION	AMT	ISSUED
37387	MAINT/ALTR	75	10/31/2018
26546	SFR	614	12/21/2007
13993	REMODEL	100	05/11/1998

SALES DATA

OFF RECORD Number	DATE	TYPE INST	Q U	V I	RSN CD	SALE PRICE
1477/1761	10/17/2022	WD	Q	I	01	415,000
GRANTOR: METZGER JOSEPH J						
GRANTEE: STONE RALPH						
0872/1037	12/30/1998	WD	Q	I		91,700
GRANTOR: WESTFIELD GROUP LTD						
GRANTEE: METZGER						

BUILDING NOTES

BUILDING DIMENSIONS

BAS=[ORIG=0,0] W32 S24 E28 E4 S12 E24 N46 W24 S10 $
BAS=[ORIG=24,-10] N12 W24 S12 E24 $
FDU=[ORIG=0,-41] N12 W24 S12 E24 $
PTO=[ORIG=0,-30] N11 W24 S11 E24 $
FOP=[ORIG=-4,24] S12 E4 N12 W4 $
.

EXTRA FEATURES

LN	OB/XF CODE	DESCRIPTION	BLD	CAP	L	W	UNITS	UT	Adj R	ADJ UNIT PRICE	ORIG COND	YEAR ON	YEAR ACTUAL	Q	% COND	OB/XF MKT VALUE	NOTES
1	0190	FPLC PF	0	0	0	0	1.00	UT	1,200.00	1,200.00	100	1998	1998	3	100	1,200	
2	0294	SHED WOOD/	0	0	0	0	1.00	UT	0.00	0.00	100	1998	1998	3	100	100	
3	0296	SHED METAL	0	0	0	0	1.00	UT	400.00	400.00	50	2010	2010	3	50	200	
4	0258	PATIO	0	0	0	0	1.00	UT	0.00	0.00	100	2010	2010	3	100	500	

LAND DESCRIPTION

TOTAL OB/XF 2,000

LN	USE CODE	CLS	LAND USE DESCRIPTION	CAP	RD	LOC ZONE	FRONT	DEPTH	TOT LND UTS	UNIT TYPE	DT	DPTH FACT	% COND	TOT ADJ	UNIT PRICE	ADJ UNIT PRICE	LAND VALUE	OTHER ADJUSTMENTS AND NOTES	YEAR	DENSITY	DECL	FRZ	YR	CONSRV
1	0100	C	SFR	0		A-1	0.00	0.00	5.01	AC		1.00	1.00	1.00	11,000.00	11,000.00	55,110							

REVIEW DATE 02/08/2023 BY CP Total Acres: 5.01 Total Land Value: 55,110 Market: 0 Agricultural: 0 Common: 55,110 PRINTED 11/19/2025 BY SYS