N 330 FT OF SE1/4 OF SW1/4, EX T
FOR RD R/W.

COLE DION/COLE JAN
256 SW GENTLE GLN
LAKE CITY, FL 32024

2026

11-5S-16-03572-000

COLUMBIA COUNTY PROPERTY

BUILDING CHARACTERISTICS

ELEMENT	CD	CONSTRUCTION
Exterior Wall	19	COMMON BRK 80
Exterior Wall	31	VINYL SID 20
Roof Structur	03	GABLE/HIP 100
Roof Cover	14	PREFIN MT 100
Interior Wall	05	DRYWALL 100
Interior Floo	14	CARPET 90
Interior Floo	15	HARDTILE 10
Air Condition	03	CENTRAL 100
Heating Type	04	AIR DUCTED 100
Bedrooms		4 100
Bathrooms		4 100
Frame	01	NONE 100
Stories	1.5	1.5 100
Architectual	05	CONV 100
Units		0 100
Condition Adj	03	03 100
Kitchen Adjus	01	01 100
Quality	05	05
DOR CODE	5000	IMPROVED AG
MAP NUM		MKT AREA 01
NEIGHBORHOOD/LOC	11516.00	1.00/

AREA TYPE	TOTAL GROSS AREA	PCT OF BASE	YEAR	TOT ADJ AREA	SUBAREA MARKET VALUE
BAS	1,951	100		1,951	181,272
FCP	529	25		132	12,264
FOP	240	30		72	6,690
FOP	240	30		72	6,690
FSP	170	40		68	6,318
FST	115	55		63	5,853
FUS	1,160	100		1,160	107,778
UOP	598	20		120	11,149
TOTALS	5,003			3,638	338,015

MARKET ADJUSTMENTS

TYPE	MDL	EFF. AREA	TOT ADJ PTS	EFF. BASE RATE	REPL. COST NEW	AYB	EYB	ECON	FNCT		NORM	% COND
0100	01	3,638	122.9918	137.75	501,134	1994	1994	0	0	0	32.55	67.45

1 SINGLE FAM 100% - 1995 Heated Area: 3111 HX Base Yr 1995

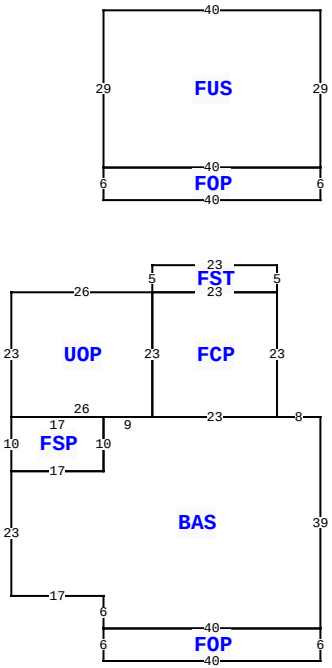

239 SW GENTLE GLN, LAKE CITY

BLD DATE		LGL DATE	
XF DATE		LAND DATE	04/07/2025 MLU
INC DATE		AG DATE	

VALUATION SUMMARY

VALUATION BY		STANDARD
Tax Group: 3	Tax Dist:	
BUILDING MARKET VALUE		338,015
TOTAL MARKET OB/XF VALUE		31,244
TOTAL LAND VALUE - MARKET		88,290
TOTAL MARKET VALUE		449,049
SOH/AGL Deduction		154,250
ASSESSED VALUE		294,799
TOTAL EXEMPTION VALUE	HX HB	50,722
BASE TAXABLE VALUE		244,077
TOTAL JUST VALUE		457,549
NCON VALUE		0
INCOME VALUE		
PREVIOUS YEAR MKT VALUE		462,811

SALE:1:1: 9.81 ACRES

PERMIT NUM	DESCRIPTION	AMT	ISSUED
28447	MAINT/ALTR	65	03/24/2010
19228	M H	125	02/14/2002
7790	SFR	92,000	11/17/1993

SALES DATA

OFF RECORD Number	DATE	TYPE INST	Q U /	V I /	RSN CD	SALE PRICE
0768/1390	12/15/1992	WD	Q	V		18,000

GRANTOR: EDWARD STEWART
GRANTEE: DION COLE

BUILDING NOTES

BUILDING DIMENSIONS

BAS= W8 FCP= N23 FST= N5 W23 S5 E23$ W23 S23 E23$ W23 UOP= N23 W26 S23 E26$ W9 FSP= W17 S10 E17 N10$ S10 W17S23 E17 S6 FOP= S6 E40 N6 W40$ E40 N39 $ PTR= N40 FOP= N6 FUS= N29 W40 S29 E40$ W40 S6 E40$ S40$.

EXTRA FEATURES

LN	OB/XF CODE	DESCRIPTION	BLD	CAP	L	W	UNITS	UT	Adj R	ADJ UNIT PRICE	ORIG COND	YEAR ON	YEAR ACTUAL	Q	% COND	OB/XF MKT VALUE	NOTES
1	0210	GARAGE U	0	100	32	48	1.00	UT	0.00	0.00	100	1994	1994	3	100	6,500	
2	0190	FPLC PF	0	100	0	0	1.00	UT	1,200.00	1,200.00	100	1994	1994	3	100	1,200	
3	0296	SHED METAL	0	100	8	10	80.00	UT	5.00	5.00	75	1994	1994	3	75	300	
4	0166	CONC,PAVMT	0	100	10	272	2,720.00	UT	2.00	2.00	75	1993	1993	3	75	4,080	
5	0070	CARPORT UF	0	100	12	32	384.00	UT	3.00	3.00	75	1993	1993	3	75	864	
6	9947	Septic	0	0	0	0	1.00	UT	3,000.00	3,000.00	100			3	100	3,000	
7	0120	CLFENCE 4	0	100	0	0	1.00	UT	0.00	0.00	100	1993	1993	3	100	600	
8	9945	Well/Sept	0	100	0	0	1.00	UT	7,000.00	7,000.00	100			3	100	7,000	
9	0296	SHED METAL	0	100	10	20	200.00	UT	5.00	5.00	75	1993	1993	3	75	750	
10	0296	SHED METAL	0	100	10	12	120.00	UT	5.00	5.00	75	1993	1993	3	75	450	

TOTAL OB/XF 24,744

LAND DESCRIPTION

LN	USE CODE	CLS	LAND USE DESCRIPTION	CAP	RD	LOC ZONE	FRONT	DEPTH	TOT LND UTS	UNIT TYPE	DT	DPTH FACT	% COND	TOT ADJ	UNIT PRICE	ADJ UNIT PRICE	LAND VALUE	OTHER ADJUSTMENTS AND NOTES	YEAR	DENSITY	DECL	FRZ	YR	CONSRV
1	0100	C	SFR	100		A-1	0.00	0.00	8.31	AC		1.00	1.00	1.00	9,000.00	9,000.00	74,790							
2	0000	C	VAC RES	100		A-1	0.00	0.00	0.50	AC		1.00	1.00	1.00	9,000.00	9,000.00	4,500							
3	6677	A	PECANS	0		A-1	0.00	0.00	1.00	AC		1.00	1.00	1.00	500.00	500.00	500							
4	9910	M	MKT.VAL.AG	0		A-1	0.00	0.00	1.00	AC		1.00	1.00	1.00	9,000.00	9,000.00	9,000							

REVIEW DATE 09/18/2019 BY BC Total Acres: 9.81 Total Land Value: 79,790 Market: 9,000 Agricultural: 500 Common: 79,290 PRINTED 11/18/2025 BY SYS

N 330 FT OF SE1/4 OF SW1/4, EX T
FOR RD R/W.

COLE DION/COLE JAN
256 SW GENTLE GLN
LAKE CITY, FL 32024

2026

11-5S-16-03572-000

BUILDING CHARACTERISTICS

ELEMENT	CD	CONSTRUCTION

DOR CODE	5000	IMPROVED AG	
MAP NUM		MKT AREA	01
NEIGHBORHOOD/LOC	11516.00	1.00/	

AREA TYPE	TOTAL GROSS AREA	PCT OF BASE	YEAR	TOT ADJ AREA	SUBAREA MARKET VALUE
TOTALS					

MARKET ADJUSTMENTS

TYPE	MDL	EFF. AREA	TOT ADJ PTS	EFF. BASE RATE	REPL. COST NEW	AYB	EYB	ECON	FNCT		NORM	% COND

BLD DATE		LGL DATE	
XF DATE		LAND DATE	04/07/2025 MLU
INC DATE		AG DATE	

COLUMBIA COUNTY PROPERTY

PAGE 2 of 2 3

VALUATION SUMMARY

VALUATION BY		STANDARD
Tax Group: 3	Tax Dist:	
BUILDING MARKET VALUE		338,015
TOTAL MARKET OB/XF VALUE		31,244
TOTAL LAND VALUE - MARKET		88,290
TOTAL MARKET VALUE		449,049
SOH/AGL Deduction		154,250
ASSESSED VALUE		294,799
TOTAL EXEMPTION VALUE	HX HB	50,722
BASE TAXABLE VALUE		244,077
TOTAL JUST VALUE		457,549
NCON VALUE		0
INCOME VALUE		
PREVIOUS YEAR MKT VALUE		462,811

PERMIT NUM	DESCRIPTION	AMT	ISSUED

SALES DATA

OFF RECORD Number	DATE	TYPE INST	Q U /	V I /	RSN CD	SALE PRICE
0768/1390	12/15/1992	WD	Q	V		18,000

GRANTOR: EDWARD STEWART

GRANTEE: DION COLE

BUILDING NOTES

BUILDING DIMENSIONS

EXTRA FEATURES

LN	OB/XF CODE	DESCRIPTION	BLD	CAP	L	W	UNITS	UT	Adj R	ADJ UNIT PRICE	ORIG COND	YEAR ON	YEAR ACTUAL	Q	% COND	OB/XF MKT VALUE	NOTES
11	0060	CARPORT F	0	100	0	0	1.00	UT	0.00	0.00	100	2010	2010	3	100	1,800	
12	0252	LEAN-TO W/	0	100	0	0	1.00	UT	0.00	0.00	100	2010	2010	3	100	200	
13	0031	BARN,MT AE	0	100	25	30	1.00	UT	0.00	0.00	100	2019	2019	3	100	4,500	

LAND DESCRIPTION

TOTAL OB/XF 6,500

LN	USE CODE	CLS	LAND USE DESCRIPTION	CAP	RD	LOC ZONE	FRONT	DEPTH	TOT LND UTS	UNIT TYPE	DT	DPTH FACT	% COND	TOT ADJ	UNIT PRICE	ADJ UNIT PRICE	LAND VALUE	OTHER ADJUSTMENTS AND NOTES	YEAR	DENSITY	DECL	FRZ	YR	CONSRV

REVIEW DATE 09/18/2019 BY BC Total Acres: 9.81 Total Land Value: 79,790 Market: 9,000 Agricultural: 500 Common: 79,290 PRINTED 11/18/2025 BY SYS