BEG 976.11 FT N OF SE COR OF
W1/2 OF NE1/4 BEING ON N R/W
SR-240, RUN W ALONG R/W 375.8

PHILPOT RICHARD B/PHILPOT LEANNE
5207 SW CR 240
LAKE CITY, FL 32024

2026

11-5S-16-03568-001

COLUMBIA COUNTY PROPERTY

BUILDING CHARACTERISTICS

ELEMENT	CD	CONSTRUCTION
Exterior Wall	19	COMMON BRK 90
Exterior Wall	31	VINYL SID 10
Roof Structur	03	GABLE/HIP 100
Roof Cover	03	COMP SHNGL 100
Interior Wall	05	DRYWALL 100
Interior Floo	14	CARPET 90
Interior Floo	08	SHT VINYL 10
Air Condition	03	CENTRAL 100
Heating Type	04	AIR DUCTED 100
Bedrooms		3 100
Bathrooms		2 100
Frame		N/A 100
Stories	1.	1. 100
Architectual	05	CONV 100
Units		0 100
Condition Adj	03	03 100
Kitchen Adjus	01	01 100
Quality	05	05
DOR CODE	0100	SINGLE FAMILY
MAP NUM		MKT AREA 01
NEIGHBORHOOD/LOC	11516.00	1.00/

AREA TYPE	TOTAL GROSS AREA	PCT OF BASE	YEAR	TOT ADJ AREA	SUBAREA MARKET VALUE
BAS	2,433	100		2,433	186,769
FCP	240	25		60	4,606
FCP	391	25		98	7,523
FOP	126	30		38	2,917
FOP	420	30		126	9,673
FST	345	55		190	14,585
UCP	1,035	20		207	15,891
TOTALS	4,990			3,152	241,963

MARKET ADJUSTMENTS

TYPE	MDL	EFF. AREA	TOT ADJ PTS	EFF. BASE RATE	REPL. COST NEW	AYB	EYB	ECON	FNCT		NORM	% COND
0100	01	3,152	105.4500	118.10	372,251	1979	1979	0	0	0	35.00	65.00

1 SINGLE FAM 100% - 0 Heated Area: 2433 HX Base Yr

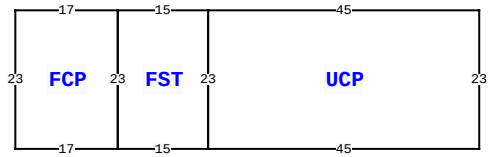

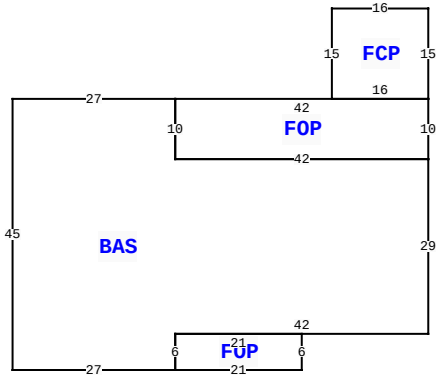

5207 SW COUNTY ROAD 240 , LAKE CITY

BLD DATE		LGL DATE	
XF DATE		LAND DATE	04/07/2025 MLU
INC DATE		AG DATE	

VALUATION SUMMARY

VALUATION BY		STANDARD
Tax Group: 3	Tax Dist:	
BUILDING MARKET VALUE		241,963
TOTAL MARKET OB/XF VALUE		16,900
TOTAL LAND VALUE - MARKET		55,000
TOTAL MARKET VALUE		313,863
SOH/AGL Deduction		134,791
ASSESSED VALUE		179,072
TOTAL EXEMPTION VALUE	HX HB	50,722
BASE TAXABLE VALUE		128,350
TOTAL JUST VALUE		313,863
NCON VALUE		0
INCOME VALUE		
PREVIOUS YEAR MKT VALUE		313,863

PERMIT NUM	DESCRIPTION	AMT	ISSUED
000051759	Roof Replacement	17,000	12/09/2024
12183	PUMP/UTPOL	30	02/20/1997

SALES DATA

OFF RECORD Number	DATE	TYPE INST	Q U	V I	RSN CD	SALE PRICE
1248/2589	8/22/2012	QC	U	I	14	100

GRANTOR: RICHARD B & LEANNE B

GRANTEE: RICHARD B & G LEANN

BUILDING NOTES

BUILDING DIMENSIONS

BAS= W27 S45 E27 FOP= E21 N6W21 S6$ N6 E42 N29 FOP= N10 FCP= N15 W16 S15 E16$ W42 S10 E42$ W42 N10$ PTR= N40 UCP= N23 W45 FST= W15 FCP= W17 S23 E17 N23$ S23 E15 N23$ S23 E45$ S40$.

EXTRA FEATURES

LN	OB/XF CODE	DESCRIPTION	BLD	CAP	L	W	UNITS	UT	Adj R	ADJ UNIT PRICE	ORIG COND	YEAR ON	YEAR ACTUAL	Q	% COND	OB/XF MKT VALUE	NOTES
1	0180	FPLC 1STRY	0	100	0	0	1.00	UT	2,000.00	2,000.00	100	0	0	3	100	2,000	
2	0294	SHED WOOD/	0	100	0	0	1.00	UT	0.00	0.00	100	0	0	3	100	200	
3	0040	BARN,POLE	0	100	0	0	1.00	UT	0.00	0.00	100	1993	1993	3	100	3,500	
4	0031	BARN,MT AE	0	100	40	60	1.00	UT	0.00	0.00	100	2009	2009	3	100	10,000	
5	0252	LEAN-TO W/	0	100	0	0	1.00	UT	0.00	0.00	100	2014	2014	3	100	200	
6	0296	SHED METAL	0	100	0	0	1.00	UT	0.00	0.00	100	2014	2014	3	100	1,000	

LAND DESCRIPTION

TOTAL OB/XF 16,900

LN	USE CODE	CLS	LAND USE DESCRIPTION	CAP	RD	LOC ZONE	FRONT	DEPTH	TOT LND UTS	UNIT TYPE	DT	DPTH FACT	% COND	TOT ADJ	UNIT PRICE	ADJ UNIT PRICE	LAND VALUE	OTHER ADJUSTMENTS AND NOTES	YEAR	DENSITY	DECL	FRZ	YR	CONSRV
1	0100	C	SFR	100		A-1	0.00	0.00	5.00	AC		1.00	1.00	1.00	11,000.00	11,000.00	55,000							

REVIEW DATE 02/04/2025 BY JS Total Acres: 5.00 Total Land Value: 55,000 Market: 0 Agricultural: 0 Common: 55,000 PRINTED 11/19/2025 BY SYS