LOT 27 EMERALD FOREST PHASE 2 S/
ORB 765-1296, 765-1297, 768-2271

THE MCGRAW LIVING TRUST/
339 SW EMERALD ST
LAKE CITY, FL 32024

2026

11-4S-16-02919-127

COLUMBIA COUNTY PROPERTY

BUILDING CHARACTERISTICS

ELEMENT	CD	CONSTRUCTION
Exterior Wall	19	COMMON BRK 50
Exterior Wall	31	VINYL SID 50
Roof Structur	03	GABLE/HIP 100
Roof Cover	03	COMP SHNGL 100
Interior Wall	05	DRYWALL 100
Interior Floo	14	CARPET 90
Interior Floo	08	SHT VINYL 10
Air Condition	03	CENTRAL 100
Heating Type	04	AIR DUCTED 100
Bedrooms		2 100
Bathrooms		2 100
Frame	01	NONE 100
Stories	1.	1. 100
Architectual	05	CONV 100
Units		0 100
Condition Adj	03	03 100
Kitchen Adjus	01	01 100
Quality	05	05
DOR CODE	0100	SINGLE FAMILY
MAP NUM		MKT AREA 06
NEIGHBORHOOD/LOC	11416.040	1.00/

AREA TYPE	TOTAL GROSS AREA	PCT OF BASE	YEAR	TOT ADJ AREA	SUBAREA MARKET VALUE
BAS	1,454	100		1,454	114,792
FDG	572	60		343	27,080
FGR	476	55		262	20,685
UEP	256	60		154	12,158
UOP	224	20	2024	45	3,553
TOTALS	2,982			2,258	178,267

MARKET ADJUSTMENTS

TYPE	MDL	EFF. AREA	TOT ADJ PTS	EFF. BASE RATE	REPL. COST NEW	AYB	EYB	ECON	FNCT		NORM	% COND
0100	01	2,258	108.4460	121.46	274,257	1992	1992	0	0	0	35.00	65.00

1 SINGLE FAM 100% - 0 Heated Area: 1454 HX Base Yr

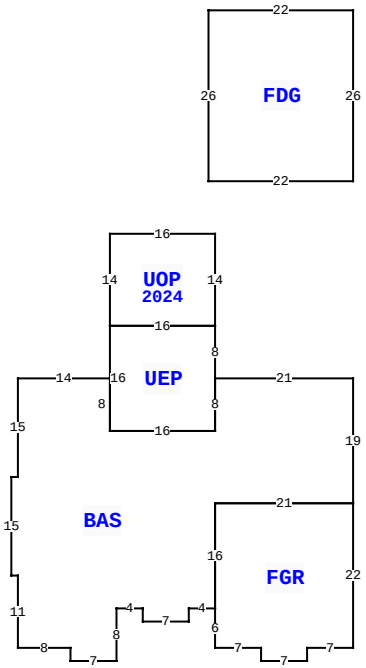

339 SW EMERALD ST, LAKE CITY

BLD DATE		LGL DATE	
XF DATE		LAND DATE	04/03/2025 MLU
INC DATE		AG DATE	

VALUATION SUMMARY

VALUATION BY		STANDARD
Tax Group: 2	Tax Dist:	
BUILDING MARKET VALUE		178,267
TOTAL MARKET OB/XF VALUE		8,000
TOTAL LAND VALUE - MARKET		35,000
TOTAL MARKET VALUE		221,267
SOH/AGL Deduction		78,418
ASSESSED VALUE		142,849
TOTAL EXEMPTION VALUE	13 HX HB	142,849
BASE TAXABLE VALUE		0
TOTAL JUST VALUE		221,267
NCON VALUE		0
INCOME VALUE		
PREVIOUS YEAR MKT VALUE		221,567

PERMIT NUM	DESCRIPTION	AMT	ISSUED
000049224	Remodel	18,747	02/16/2024
23106	GARAGE	80	05/04/2005

SALES DATA

OFF RECORD Number	DATE	TYPE INST	Q U	V I	RSN CD	SALE PRICE
1353/0061	1/30/2018	WD	U	I	11	100
GRANTOR: ROBERT E JR & CAROLE						
GRANTEE: ROBERT E JR & CAROL						
0765/1297	9/28/1992	WD	Q	I		69,600
GRANTOR: CRAWFORD CONST						
GRANTEE: ROBERT MCGRAW JR						

BUILDING NOTES

BUILDING DIMENSIONS

BAS=[ORIG=0,0] W21 S8 W16 N8 W14 S15 W1 S15 E1 S11 E8 S2 E7 N8 E4 S2 E7 N2 E4 N16 E21 N19 $
FDG=[ORIG=0,-30] N26 W22 S26 E22 $
FGR=[ORIG=-21,35] S6 E7 S2 E7 N2 E7 N22 W21 S16 $
UEP=[ORIG=-21,0] N8 W16 S16 E16 N8 $
PTR=[ORIG=0,0] N30 S30 $
UOP=[YR=2024;ORIG=-37,-22] E16 S14 W16 N14 $
.

EXTRA FEATURES

LN	OB/XF CODE	DESCRIPTION	BLD	CAP	L	W	UNITS	UT	Adj R	ADJ UNIT PRICE	ORIG COND	YEAR ON	YEAR ACTUAL	Q	% COND	OB/XF MKT VALUE	NOTES
1	0166	CONC,PAVMT	0	100	100	10	1,000.00	UT	1.40	1.40	100	0	0	3	100	1,400	
2	0190	FPLC PF	0	100	0	0	1.00	UT	1,200.00	1,200.00	100	0	0	3	100	1,200	
3	0166	CONC,PAVMT	0	100	0	0	1.00	UT	0.00	0.00	100	2005	2005	3	100	300	
4	0104	GENERATOR	0	100	0	0	1.00	UT	6,000.00	6,000.00	100	2024	2023		85	5,100	

LAND DESCRIPTION

TOTAL OB/XF 8,000

LN	USE CODE	CLS	LAND USE DESCRIPTION	CAP	RD	LOC ZONE	FRONT	DEPTH	TOT LND UTS	UNIT TYPE	DT	DPTH FACT	% COND	TOT ADJ	UNIT PRICE	ADJ UNIT PRICE	LAND VALUE	OTHER ADJUSTMENTS AND NOTES	YEAR	DENSITY	DECL	FRZ	YR	CONSRV
1	0100	C	SFR	100		RSF-1	0.00	0.00	1.00	LT		1.00	1.00	1.00	35,000.00	35,000.00	35,000							

REVIEW DATE 11/09/2023 BY KS Total Acres: 0.51 Total Land Value: 35,000 Market: 0 Agricultural: 0 Common: 35,000 PRINTED 11/07/2025 BY SYS