LOTS 1 & 7 MAY-FAIR S/D.
764-1407, WD 1235-1453,

SKIPPER RICHARD E/SKIPPER EDITH
223 SW MAYFAIR LN
LAKE CITY, FL 32024

2026

11-4S-16-02911-107

BUILDING CHARACTERISTICS

ELEMENT	CD	CONSTRUCTION
Exterior Wall	08	WD OR PLY 80
Exterior Wall	19	COMMON BRK 20
Roof Structur	08	IRREGULAR 100
Roof Cover	03	COMP SHNGL 100
Interior Wall	05	DRYWALL 100
Interior Floo	14	CARPET 80
Interior Floo	08	SHT VINYL 20
Air Condition	03	CENTRAL 100
Heating Type	04	AIR DUCTED 100
Bedrooms		3 100
Bathrooms		2 100
Frame	01	NONE 100
Stories	1.	1. 100
Architectual	05	CONV 100
Units		0 100
Condition Adj	03	03 100
Kitchen Adjus	01	01 100
Quality	06	06
DOR CODE	0100	SINGLE FAMILY
MAP NUM		MKT AREA 06
NEIGHBORHOOD/LOC	11416.030	1.00/

AREA TYPE	TOTAL GROSS AREA	PCT OF BASE	YEAR	TOT ADJ AREA	SUBAREA MARKET VALUE
BAS	400	100		400	31,200
BAS	1,454	100		1,454	113,412
FDG	600	60		360	28,080
FOP	20	30		6	468
UEP	300	60		180	14,040
TOTALS	2,774			2,400	187,200

MARKET ADJUSTMENTS

TYPE	MDL	EFF. AREA	TOT ADJ PTS	EFF. BASE RATE	REPL. COST NEW	AYB	EYB	ECON	FNCT		NORM	% COND
0100	01	2,400	107.1462	120.00	288,000	1992	1992	0	0	0	35.00	65.00

1 SINGLE FAM 100% - 0 Heated Area: 1854 HX Base Yr

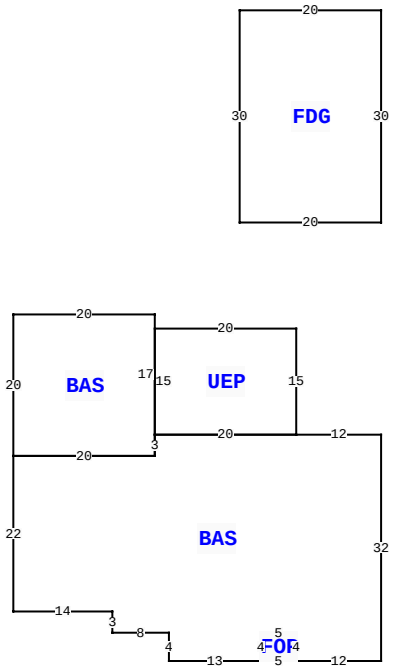

223 SW MAYFAIR LN, LAKE CITY

BLD DATE		LGL DATE	
XF DATE		LAND DATE	04/03/2025 MLU
INC DATE		AG DATE	

COLUMBIA COUNTY PROPERTY

PAGE 1 of 1 2

VALUATION SUMMARY

VALUATION BY		STANDARD
Tax Group: 2	Tax Dist:	
BUILDING MARKET VALUE		187,200
TOTAL MARKET OB/XF VALUE		5,961
TOTAL LAND VALUE - MARKET		70,000
TOTAL MARKET VALUE		263,161
SOH/AGL Deduction		98,645
ASSESSED VALUE		164,516
TOTAL EXEMPTION VALUE	HX HB 13	164,516
BASE TAXABLE VALUE		0
TOTAL JUST VALUE		263,161
NCON VALUE		0
INCOME VALUE		
PREVIOUS YEAR MKT VALUE		263,161

PERMIT NUM	DESCRIPTION	AMT	ISSUED
31213	MAINT/ALTR	45	06/27/2013
10059	GARAGE	105	08/10/1995

SALES DATA

OFF RECORD Number	DATE	TYPE INST	Q U	V I	RSN CD	SALE PRICE
1235/1453	5/25/2012	WD	Q	I	03	17,500
GRANTOR: PETER W GIEBEIG						
GRANTEE: RICHARD E & EDITH W						
0764/1407	9/08/1992	WD	Q	I		69,900
GRANTOR: GIEBEIG						
GRANTEE: SKIPPER						

BUILDING NOTES

BUILDING DIMENSIONS

BAS= W12 UEP= N15 W20 S15 E20$ W20 BAS= N17 W20 S20 E20N3$ S3 W20 S22 E14 S3 E8 S4 E13 FOP= E5 N4 W5 S4$ N4 E5 S4 E12 N32$ PTR= N30 FDG= N30 W20 S30 E20$ S30$.

EXTRA FEATURES

LN	OB/XF CODE	DESCRIPTION	BLD	CAP	L	W	UNITS	UT	Adj R	ADJ UNIT PRICE	ORIG COND	YEAR ON	YEAR ACTUAL	Q	% COND	OB/XF MKT VALUE	NOTES
1	0166	CONC,PAVMT	0	100	66	18	1,188.00	UT	1.40	1.40	100	0	0	3	100	1,663	
2	0166	CONC,PAVMT	0	100	15	20	300.00	UT	1.50	1.50	100	1995	1995	3	100	450	
3	0296	SHED METAL	0	100	12	14	168.00	UT	11.00	11.00	100	2009	2009	3	100	1,848	
4	0120	CLFENCE 4	0	100	0	0	1.00	UT	0.00	0.00	100	2019	2019	3	100	2,000	

LAND DESCRIPTION

TOTAL OB/XF 5,961

LN	USE CODE	CLS	LAND USE DESCRIPTION	CAP	RD	LOC ZONE	FRONT	DEPTH	TOT LND UTS	UNIT TYPE	DT	DPTH FACT	% COND	TOT ADJ	UNIT PRICE	ADJ UNIT PRICE	LAND VALUE	OTHER ADJUSTMENTS AND NOTES	YEAR	DENSITY	DECL	FRZ	YR	CONSRV
1	0100	C	SFR	100		RSF-1	0.00	0.00	1.00	LT		1.00	1.00	1.00	35,000.00	35,000.00	35,000							
2	0100	C	SFR	100		RSF-1	0.00	0.00	1.00	LT		1.00	1.00	1.00	35,000.00	35,000.00	35,000							

REVIEW DATE 11/08/2023 BY JB Total Acres: 1.00 Total Land Value: 70,000 Market: 0 Agricultural: 0 Common: 70,000 PRINTED 11/18/2025 BY SYS