LOT 8 HUNTINGTON AT WOODCREST S/
819-2235, 828-2075, FJ NAME CHNG

KING LYNNEDA RAYE
309 SW HUNTINGTON GLN
LAKE CITY, FL 32024

**2026**

**11-4S-16-02905-208**

## COLUMBIA COUNTY PROPERTY



## BUILDING CHARACTERISTICS

| ELEMENT | CD | CONSTRUCTION |
|---|---|---|
| Exterior Wall | 19 | COMMON BRK 100 |
| Roof Structur | 08 | IRREGULAR 100 |
| Roof Cover | 12 | MODULAR MT 100 |
| Interior Wall | 05 | DRYWALL 100 |
| Interior Floo | 14 | CARPET 90 |
| Interior Floo | 15 | HARDTILE 10 |
| Air Condition | 03 | CENTRAL 100 |
| Heating Type | 04 | AIR DUCTED 100 |
| Bedrooms | | 3 100 |
| Bathrooms | | 2 100 |
| Frame | 01 | NONE 100 |
| Stories | 1. | 1. 100 |
| Architectual | 05 | CONV 100 |
| Units | | 0 100 |
| Condition Adj | 03 | 03 100 |
| Kitchen Adjus | 01 | 01 100 |
| Quality | 05 | 05 |
| DOR CODE | 0100 | SINGLE FAMILY |
| MAP NUM | | MKT AREA 06 |
| NEIGHBORHOOD/LOC | 11416.050 | 1.00/ |

| AREA TYPE | TOTAL GROSS AREA | PCT OF BASE | YEAR | TOT ADJ AREA | SUBAREA MARKET VALUE |
|---|---|---|---|---|---|
| BAS | 1,827 | 100 | | 1,827 | 170,994 |
| FGR | 504 | 55 | | 277 | 25,925 |
| FOP | 36 | 30 | | 11 | 1,030 |
| FSP | 226 | 40 | | 90 | 8,423 |
| FST | 448 | 55 | | 246 | 23,024 |
| UGR | 784 | 45 | | 353 | 33,038 |
| TOTALS | 3,825 | | | 2,804 | 262,434 |

## MARKET ADJUSTMENTS

| TYPE | MDL | EFF. AREA | TOT ADJ PTS | EFF. BASE RATE | REPL. COST NEW | AYB | EYB | ECON | FNCT | | NORM | % COND |
|---|---|---|---|---|---|---|---|---|---|---|---|---|
| 0100 | 01 | 2,804 | 116.0640 | 129.99 | 364,492 | 1997 | 1997 | 0 | 0 | 0 | 28.00 | 72.00 |

1 SINGLE FAM 100% - 1998 Heated Area: 1827 HX Base Yr 1998

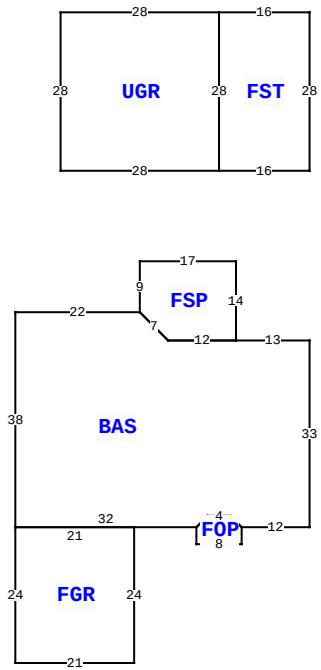


309 SW HUNTINGTON GLN, LAKE CITY

| | | | |
|---|---|---|---|
| BLD DATE | | LGL DATE | |
| XF DATE | | LAND DATE | 04/03/2025 MLU |
| INC DATE | | AG DATE | |

## VALUATION SUMMARY

| | | |
|---|---|---|
| VALUATION BY | | STANDARD |
| Tax Group: 2 | Tax Dist: | |
| BUILDING MARKET VALUE | | 262,434 |
| TOTAL MARKET OB/XF VALUE | | 27,831 |
| TOTAL LAND VALUE - MARKET | | 35,000 |
| TOTAL MARKET VALUE | | 325,265 |
| SOH/AGL Deduction | | 120,606 |
| ASSESSED VALUE | | 204,659 |
| TOTAL EXEMPTION VALUE | HX HB WX | 55,722 |
| BASE TAXABLE VALUE | | 148,937 |
| TOTAL JUST VALUE | | 325,265 |
| NCON VALUE | | 0 |
| INCOME VALUE | | |
| PREVIOUS YEAR MKT VALUE | | 328,910 |

| PERMIT NUM | DESCRIPTION | AMT | ISSUED |
|---|---|---|---|
| 21950 | POOL ENCL | 95 | 06/09/2004 |
| 18376 | POOL | 135 | 06/11/2001 |
| 16182 | GARAGE | 200 | 10/26/1999 |
| 11677 | SFR | 295 | 09/23/1996 |

## SALES DATA

| OFF RECORD Number | DATE | TYPE INST | Q U | V I | RSN CD | SALE PRICE |
|---|---|---|---|---|---|---|
| 1525/823 | 10/15/2024 | LE | U | I | 14 | 100 |
| GRANTOR: MORRISON LYNNEDA R AK | | | | | | |
| GRANTEE: KING LYNNEDA RAYE ( | | | | | | |
| 0828/2075 | 9/30/1996 | WD | Q | V | | 16,900 |
| GRANTOR: PETER W GIEBEIG | | | | | | |
| GRANTEE: LYNNEDA R MORRISON | | | | | | |

## BUILDING NOTES

## BUILDING DIMENSIONS

BAS= W13 FSP= N14 W17 S9 R5 D5 E12$ W12 U5 L5 W22 S38 FGR= S24 E21 N24 W21$ E32 FOP= S3 E8 N3 U2 L2 W4 L2 D2 $ U2 R2 E4 R2 D2 E12 N33$ PTR= N30 FST= N28 W16 UGR= W28 S28 E28 N28$ S28 E16$ S30$.

## EXTRA FEATURES

| LN | OB/XF CODE | DESCRIPTION | BLD | CAP | L | W | UNITS | UT | Adj R | ADJ UNIT PRICE | ORIG COND | YEAR ON | YEAR ACTUAL | Q | % COND | OB/XF MKT VALUE | NOTES |
|---|---|---|---|---|---|---|---|---|---|---|---|---|---|---|---|---|---|
| 1 | 0166 | CONC,PAVMT | 0 | 100 | 0 | 0 | 2,426.00 | UT | 1.50 | 1.50 | 100 | 1996 | 1996 | 3 | 100 | 3,639 | |
| 2 | 0169 | FENCE/WOOD | 0 | 100 | 0 | 0 | 1.00 | UT | 0.00 | 0.00 | 100 | 2001 | 2001 | 3 | 100 | 1,000 | |
| 3 | 0190 | FPLC PF | 0 | 100 | 0 | 0 | 1.00 | UT | 1,200.00 | 1,200.00 | 100 | 1996 | 1996 | 3 | 100 | 1,200 | |
| 4 | 0280 | POOL R/CON | 0 | 100 | 15 | 33 | 495.00 | UT | 70.00 | 70.00 | 100 | 2001 | 2001 | 3 | 40 | 13,860 | |
| 5 | 0166 | CONC,PAVMT | 0 | 100 | 0 | 0 | 470.00 | UT | 1.50 | 1.50 | 30 | 2001 | 2001 | 3 | 30 | 212 | |
| 6 | 0282 | POOL ENCL | 0 | 100 | 33 | 40 | 1,320.00 | UT | 15.00 | 15.00 | 100 | 1996 | 1996 | 3 | 40 | 7,920 | |

## LAND DESCRIPTION

TOTAL OB/XF 27,831

| LN | USE CODE | CLS | LAND USE DESCRIPTION | CAP | RD | LOC ZONE | FRONT | DEPTH | TOT LND UTS | UNIT TYPE | DT | DPTH FACT | % COND | TOT ADJ | UNIT PRICE | ADJ UNIT PRICE | LAND VALUE | OTHER ADJUSTMENTS AND NOTES | YEAR | DENSITY | DECL | FRZ | YR | CONSRV |
|---|---|---|---|---|---|---|---|---|---|---|---|---|---|---|---|---|---|---|---|---|---|---|---|---|
| 1 | 0100 | C | SFR | 100 | | 00 | 0.00 | 0.00 | 1.00 | LT | | 1.00 | 1.00 | 1.00 | 35,000.00 | 35,000.00 | 35,000 | | | | | | | |

REVIEW DATE 01/08/2024 BY KS Total Acres: 0.75 Total Land Value: 35,000 Market: 0 Agricultural: 0 Common: 35,000 PRINTED 11/19/2025 BY SYS