LOT 44 BLK A WOODCREST S/D.

819-1874, 968-607, 972-1046, CT

WARD DILLAN S/WARD MARISSA L
249 SW GUTHRIE TER
LAKE CITY, FL 32024

2026

11-4S-16-02905-144

COLUMBIA COUNTY PROPERTY

BUILDING CHARACTERISTICS

ELEMENT	CD	CONSTRUCTION
Exterior Wall	19	COMMON BRK 100
Roof Structur	08	IRREGULAR 100
Roof Cover	14	PREFIN MT 100
Interior Wall	05	DRYWALL 100
Interior Floo	12	HARDWOOD 100
Air Condition	03	CENTRAL 100
Heating Type	04	AIR DUCTED 100
Bedrooms		3 100
Bathrooms		2.5 100
Frame	01	NONE 100
Stories	1.	1. 100
Architectual	05	CONV 100
Units		0 100
Condition Adj	03	03 100
Kitchen Adjus	01	01 100
Quality	05	05
DOR CODE	0100	SINGLE FAMILY
MAP NUM		MKT AREA 06
NEIGHBORHOOD/LOC	11416.050	1.00/

AREA TYPE	TOTAL GROSS AREA	PCT OF BASE	YEAR	TOT ADJ AREA	SUBAREA MARKET VALUE
BAS	1,676	100		1,676	194,751
FGR	438	55		241	28,004
PTO	65	5		3	349
PTO	100	5		5	581
UGR	200	45		90	10,458
UGR	280	45		126	14,642
TOTALS	2,759			2,141	248,784

MARKET ADJUSTMENTS

TYPE	MDL	EFF. AREA	TOT ADJ PTS	EFF. BASE RATE	REPL. COST NEW	AYB	EYB	ECON	FNCT		NORM	% COND
0100	01	2,141	129.6900	145.25	310,980	1996	2005	0	0	0	20.00	80.00

1 SINGLE FAM 100% - 2024 Heated Area: 1676 HX Base Yr 2024

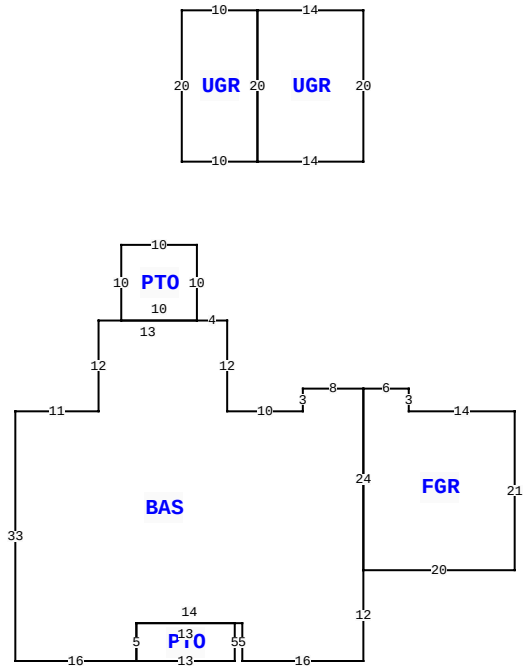

249 SW GUTHRIE TER, LAKE CITY

BLD DATE		LGL DATE	
XF DATE		LAND DATE	04/03/2025 MLU
INC DATE		AG DATE	

VALUATION SUMMARY

VALUATION BY		STANDARD
Tax Group: 2	Tax Dist:	
BUILDING MARKET VALUE		248,784
TOTAL MARKET OB/XF VALUE		3,615
TOTAL LAND VALUE - MARKET		35,000
TOTAL MARKET VALUE		287,399
SOH/AGL Deduction		0
ASSESSED VALUE		287,399
TOTAL EXEMPTION VALUE	HX HB 13	287,399
BASE TAXABLE VALUE		0
TOTAL JUST VALUE		287,399
NCON VALUE		0
INCOME VALUE		
PREVIOUS YEAR MKT VALUE		290,509

PERMIT NUM	DESCRIPTION	AMT	ISSUED
11013	SFR	220	04/11/1996

SALES DATA

OFF RECORD Number	DATE	TYPE INST	Q U	V I	RSN CD	SALE PRICE
1497/1678	8/18/2023	WD	Q	I	01	285,000
GRANTOR: STORMANT CIERRA						
GRANTEE: WARD DILLAN S						
1497/1676	8/03/2023	WD	U	I	11	100
GRANTOR: BANNISTER AVERY KYLE						
GRANTEE: BANNISTER CIERRA (F						

EXTRA FEATURES

LN	OB/XF CODE	DESCRIPTION	BLD	CAP	L	W	UNITS	UT	Adj R	ADJ UNIT PRICE	ORIG COND	YEAR ON	YEAR ACTUAL	Q	% COND	OB/XF MKT VALUE	NOTES
1	0166	CONC,PAVMT	0	100	0	0	1,810.00	UT	1.50	1.50	100	1996	1996	3	100	2,715	
2	0169	FENCE/WOOD	0	100	0	0	1.00	UT	1,200.00	1,200.00	75	2009	2009	3	75	900	

BUILDING NOTES

BUILDING DIMENSIONS

BAS=[ORIG=0,0] W8 S3 W10 N12 W4 W13 S12 W11 S33 E16 N5 E14 S5 E16 N12 N24 $
FGR=[ORIG=0,24] E20 N21 W14 N3 W6 S24 $
UGR=[ORIG=0,-30] N20 W14 S20 E14 $
UGR=[ORIG=-14,-50] W10 S20 E10 N20 $
PTO=[ORIG=-22,-9] N10 W10 S10 E10 $
PTO=[ORIG=-30,36] E13 N5 W13 S5 $
PTR=[ORIG=0,0] N30 S30 $
.

LAND DESCRIPTION

TOTAL OB/XF 3,615

LN	USE CODE	CLS	LAND USE DESCRIPTION	CAP	RD	LOC ZONE	FRONT	DEPTH	TOT LND UTS	UNIT TYPE	DT	DPTH FACT	% COND	TOT ADJ	UNIT PRICE	ADJ UNIT PRICE	LAND VALUE	OTHER ADJUSTMENTS AND NOTES	YEAR	DENSITY	DECL	FRZ	YR	CONSRV
1	0100	C	SFR	100		A-1	0.00	0.00	1.00	LT		1.00	1.00	1.00	35,000.00	35,000.00	35,000							

REVIEW DATE 01/11/2024 BY JB Total Acres: 0.50 Total Land Value: 35,000 Market: 0 Agricultural: 0 Common: 35,000 PRINTED 11/18/2025 BY SYS