LOT 17 BLK A WOODCREST S/D.
827-1607, 827-1609, 960-2169, LE

DUDLEY MARY V
137 SW ROBINSON CT
LAKE CITY, FL 32024

2026

11-4S-16-02905-117

COLUMBIA COUNTY PROPERTY

BUILDING CHARACTERISTICS

ELEMENT	CD	CONSTRUCTION
Exterior Wall	16	WD FR STUC 100
Roof Structur	08	IRREGULAR 100
Roof Cover	03	COMP SHNGL 100
Interior Wall	05	DRYWALL 100
Interior Floo	14	CARPET 90
Interior Floo	08	SHT VINYL 10
Air Condition	03	CENTRAL 100
Heating Type	04	AIR DUCTED 100
Bedrooms		3 100
Bathrooms		2 100
Frame	01	NONE 100
Stories	1.	1. 100
Architectual	05	CONV 100
Units		0 100
Condition Adj	03	03 100
Kitchen Adjus	01	01 100
Quality	07	07
DOR CODE	0100	SINGLE FAMILY
MAP NUM		MKT AREA 06
NEIGHBORHOOD/LOC	11416.050	1.00/

AREA TYPE	TOTAL GROSS AREA	PCT OF BASE	YEAR	TOT ADJ AREA	SUBAREA MARKET VALUE
BAS	1,517	100		1,517	147,392
FGR	420	55		231	22,444
FOP	50	30		15	1,457
FSP	214	40		86	8,356
PTO	48	5		2	195
TOTALS	2,249			1,851	179,843

MARKET ADJUSTMENTS

TYPE	MDL	EFF. AREA	TOT ADJ PTS	EFF. BASE RATE	REPL. COST NEW	AYB	EYB	ECON	FNCT		NORM	% COND
0100	01	1,851	123.9282	138.80	256,919	1996	2005	0	0	0	30.00	70.00

1 SINGLE FAM 100% - 2024 Heated Area: 1517 HX Base Yr 2024

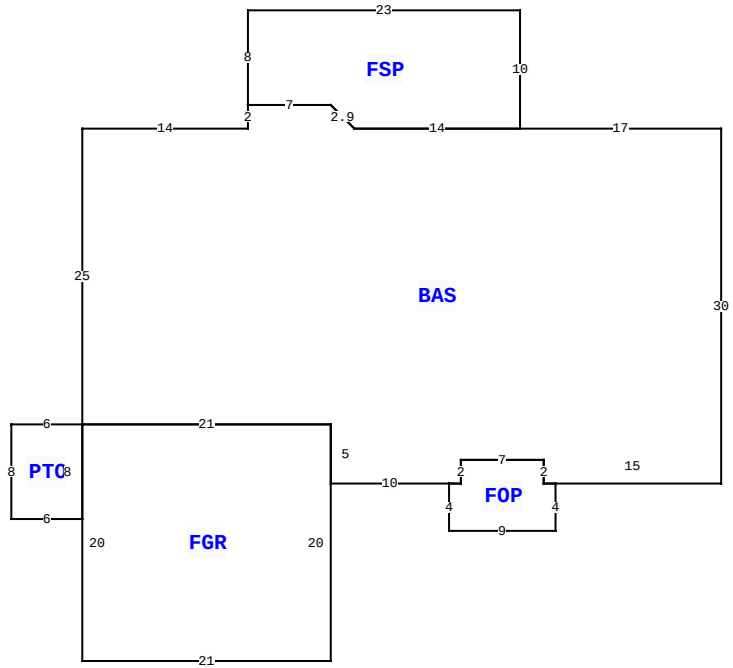

137 SW ROBINSON CT, LAKE CITY

BLD DATE		LGL DATE	
XF DATE		LAND DATE	04/03/2025 MLU
INC DATE		AG DATE	

VALUATION SUMMARY

VALUATION BY		STANDARD
Tax Group: 2	Tax Dist:	
BUILDING MARKET VALUE		179,843
TOTAL MARKET OB/XF VALUE		4,730
TOTAL LAND VALUE - MARKET		35,000
TOTAL MARKET VALUE		219,573
SOH/AGL Deduction		10,810
ASSESSED VALUE		208,763
TOTAL EXEMPTION VALUE	HX HB DX	55,722
BASE TAXABLE VALUE		153,041
TOTAL JUST VALUE		219,573
NCON VALUE		0
INCOME VALUE		
PREVIOUS YEAR MKT VALUE		223,427

PERMIT NUM	DESCRIPTION	AMT	ISSUED
32062	MAINT/ALTR	0	06/24/2014

SALES DATA

OFF RECORD Number	DATE	TYPE INST	Q U	V I	RSN CD	SALE PRICE
1483/1005	1/20/2023	WD	Q	I	01	260,000
GRANTOR: MANCIL READUS M						
GRANTEE: DUDLEY MARY V						
1477/521	10/12/2022	PB	U	I	18	0
GRANTOR: HINSON DOROTHY M						
GRANTEE: MANCIL READUS M						

BUILDING NOTES

BUILDING DIMENSIONS

BAS= W17 FSP= N10 W23 S8 E7 R2 D2 E14$ W14 U2 L2 W7 S2W14 S25 PTO= W6 S8 E6 N8$ FGR= S20 E21 N20 W21$ E21 S5 E10 FOP= S4 E9 N4 W1 N2 W7 S2W1$ E1 N2 E7 S2 E15 N30$.

EXTRA FEATURES

LN	OB/XF CODE	DESCRIPTION	BLD	CAP	L	W	UNITS	UT	Adj R	ADJ UNIT PRICE	ORIG COND	YEAR ON	YEAR ACTUAL	Q	% COND	OB/XF MKT VALUE	NOTES
1	0166	CONC,PAVMT	0	100	0	0	953.00	UT	1.50	1.50	100	1996	1996	3	100	1,430	
2	0190	FPLC PF	0	100	0	0	1.00	UT	1,200.00	1,200.00	100	1996	1996	3	100	1,200	
3	0169	FENCE/WOOD	0	100	0	0	120.00	UT	7.50	7.50	100	1996	1996	3	100	900	
4	0296	SHED METAL	0	100	12	20	240.00	UT	5.00	5.00	100	1996	1996	3	100	1,200	

LAND DESCRIPTION

TOTAL OB/XF 4,730

LN	USE CODE	CLS	LAND USE DESCRIPTION	CAP	RD	LOC ZONE	FRONT	DEPTH	TOT LND UTS	UNIT TYPE	DT	DPTH FACT	% COND	TOT ADJ	UNIT PRICE	ADJ UNIT PRICE	LAND VALUE	OTHER ADJUSTMENTS AND NOTES	YEAR	DENSITY	DECL	FRZ	YR	CONSRV
1	0100	C	SFR	100		A-1	0.00	0.00	1.00	LT		1.00	1.00	1.00	35,000.00	35,000.00	35,000							

REVIEW DATE 01/11/2024 BY KS Total Acres: 0.50 Total Land Value: 35,000 Market: 0 Agricultural: 0 Common: 35,000 PRINTED 11/18/2025 BY SYS