A PORTION OF THIS AKA LOTS 18,19
BELL SPRINGS UNR.
COMM SW COR OF NW1/4, RUN N 65.3

SUWANNEE RIVER WATER MGMT DIST
9225 CR-49
LIVE OAK, FL 32060

2026

11-2S-16-01590-000

COLUMBIA COUNTY PROPERTY

BUILDING CHARACTERISTICS

ELEMENT	CD	CONSTRUCTION
Exterior Wall	07	ASB SHNGLE 100
Roof Structur	03	GABLE/HIP 100
Roof Cover	03	COMP SHNGL 100
Interior Wall	05	DRYWALL 100
Interior Floo	06	VINYL ASB 100
Air Condition	01	NONE 100
Heating Type	02	CONVECTION 100
Bedrooms		3 100
Bathrooms		1.5 100
Frame	02	WOOD FRAME 100
Stories	1.	1. 100
Architectual	05	CONV 100
Units		0 100
Condition Adj	03	03 100
Kitchen Adjus	01	01 100
Quality	05	05
DOR CODE	8700	TIITF IMP
MAP NUM		MKT AREA 03
NEIGHBORHOOD/LOC	11216.00	1.00/

AREA TYPE	TOTAL GROSS AREA	PCT OF BASE	YEAR	TOT ADJ AREA	SUBAREA MARKET VALUE
BAS	2,416	100		2,416	131,710
FCP	240	25		60	3,271
FOP	420	30		126	6,869
UEP	200	60		120	6,542
UOP	96	20		19	1,036
TOTALS	3,372			2,741	149,427

MARKET ADJUSTMENTS

TYPE	MDL	EFF. AREA	TOT ADJ PTS	EFF. BASE RATE	REPL. COST NEW	AYB	EYB	ECON	FNCT		NORM	% COND
0100	01	2,741	74.8800	83.87	229,888	1900	1900	0	0	0	35.00	65.00

1 SINGLE FAM 0% - 0 Heated Area: 2416 HX Base Yr

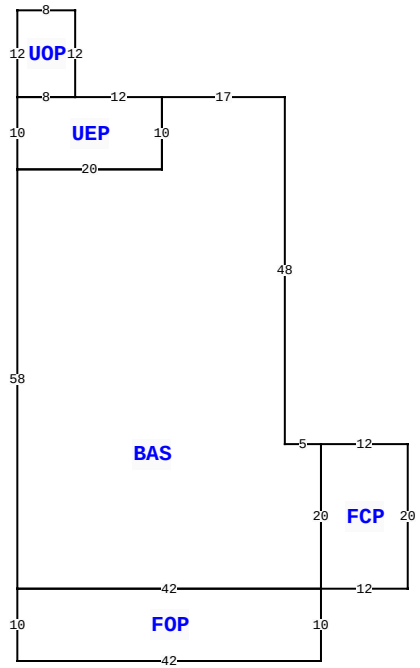

1245 NW MORRELL DR, WHITE SPRINGS

BLD DATE		LGL DATE	
XF DATE		LAND DATE	04/11/2025 MLU
INC DATE		AG DATE	

VALUATION SUMMARY

VALUATION BY		STANDARD
Tax Group: 3	Tax Dist:	
BUILDING MARKET VALUE		149,427
TOTAL MARKET OB/XF VALUE		9,502
TOTAL LAND VALUE - MARKET		160,020
TOTAL MARKET VALUE		318,949
SOH/AGL Deduction		0
ASSESSED VALUE		318,949
TOTAL EXEMPTION VALUE	05	318,949
BASE TAXABLE VALUE		0
TOTAL JUST VALUE		318,949
NCON VALUE		0
INCOME VALUE		
PREVIOUS YEAR MKT VALUE		318,949

SALE:1:1: 33.72 MOL ACRES - 675 PER ACRE

PERMIT NUM	DESCRIPTION	AMT	ISSUED
000047239	Roof Replacement	18,350	05/16/2023
000043570	Remodel	4,280	01/21/2022

SALES DATA

OFF RECORD Number	DATE	TYPE INST	Q U	V I	RSN CD	SALE PRICE
1119/2466	5/17/2007	WD	Q	I	03	785,000
GRANTOR: MORRELL MONROE						
GRANTEE: SUWANNEE RIVER WATE						
0701/0489	10/04/1989	WD	U	I	31	22,780
GRANTOR: NATURE CONSERVANCY						
GRANTEE: MORRELL MONROE						

BUILDING NOTES

BUILDING DIMENSIONS

BAS= W17 UEP= W12 UOP= N12 W8 S12 E8$ W8 S10 E20 N10$ S10 W20 S58 FOP= S10 E42N10 W42$ E42 FCP= E12 N20 W12S20$ N20 W5 N48$.

EXTRA FEATURES

LN	OB/XF CODE	DESCRIPTION	BLD	CAP	L	W	UNITS	UT	Adj R	ADJ UNIT PRICE	ORIG COND	YEAR ON	YEAR ACTUAL	Q	% COND	OB/XF MKT VALUE	NOTES
1	0166	CONC,PAVMT	0	0	0	0	1.00	UT	0.00	0.00	100	2008	2008	3	100	300	
2	0040	BARN,POLE	0	0	33	48	1,584.00	UT	3.00	3.00	100	2008	2008	3	100	4,752	
3	0060	CARPORT F	0	0	20	25	500.00	UT	4.50	4.50	100	2008	2008	3	100	2,250	
4	0296	SHED METAL	0	0	10	20	200.00	UT	11.00	11.00	100	2008	2008	3	100	2,200	

LAND DESCRIPTION

TOTAL OB/XF 9,502

LN	USE CODE	CLS	LAND USE DESCRIPTION	CAP	RD	LOC ZONE	FRONT	DEPTH	TOT LND UTS	UNIT TYPE	DT	DPTH FACT	% COND	TOT ADJ	UNIT PRICE	ADJ UNIT PRICE	LAND VALUE	OTHER ADJUSTMENTS AND NOTES	YEAR	DENSITY	DECL	FRZ	YR	CONSRV
1	8700	C	STATE	0		A-1	0.00	0.00	45.72	AC		1.00	1.00	1.00	3,500.00	3,500.00	160,020							

REVIEW DATE 04/06/2023 BY KS Total Acres: 45.72 Total Land Value: 160,020 Market: 0 Agricultural: 0 Common: 160,020 PRINTED 11/19/2025 BY SYS