COMM NE COR OF SW1/4, RUN E 661.
FOR POB, CONT S 1000.86 FT, W 60
287.55 FT, NE 1064.36 FT TO POB,

GILES SUSAN C/GARCEAU DANIEL
631 SE DIAMONDBACK GLN
HIGH SPRINGS, FL 32643

2026

10-7S-17-09974-306

COLUMBIA COUNTY PROPERTY

BUILDING CHARACTERISTICS

ELEMENT	CD	CONSTRUCTION
Exterior Wall	10	ABOVE AVG. 100
Roof Structur	08	IRREGULAR 100
Roof Cover	14	PREFIN MT 100
Interior Wall	05	DRYWALL 100
Interior Floo	12	HARDWOOD 50
Interior Floo	14	CARPET 50
Air Condition	03	CENTRAL 100
Heating Type	04	AIR DUCTED 100
Bedrooms		4 100
Bathrooms		2.5 100
Frame	01	NONE 100
Stories	2.	2. 100
Architectual	05	CONV 100
Units		0 100
Condition Adj	03	03 100
Kitchen Adjus	01	01 100
Quality	06	06
DOR CODE	0100	SINGLE FAMILY
MAP NUM		MKT AREA 02
NEIGHBORHOOD/LOC	10717.080	1.00/

AREA TYPE	TOTAL GROSS AREA	PCT OF BASE	YEAR	TOT ADJ AREA	SUBAREA MARKET VALUE
BAS	508	100		508	51,483
FEP	120	80		96	9,729
FGR	537	55		295	29,897
FOP	32	30		10	1,014
FOP	532	30		160	16,215
FST	247	55		136	13,783
FUS	384	100		384	38,916
FUS	864	100		864	87,562
UOP	48	20		10	1,014
UOP	128	20		26	2,635
TOTALS	4,032			2,615	265,015

MARKET ADJUSTMENTS

TYPE	MDL	EFF. AREA	TOT ADJ PTS	EFF. BASE RATE	REPL. COST NEW	AYB	EYB	ECON	FNCT		NORM	% COND
0100	01	2,615	135.0562	151.26	395,545	1992	1992	0	0	0	33.00	67.00

1 SINGLE FAM 100% - 2008 Heated Area: 1756 HX Base Yr 2008

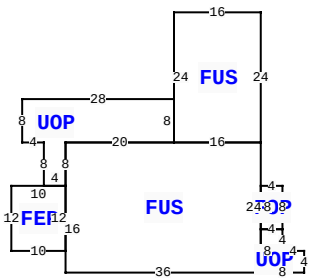

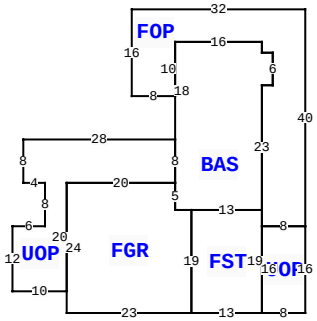

** This building has 12 Sub-Areas

631 SE DIAMONDBACK GLN, HIGH SPRINGS

BLD DATE		LGL DATE	
XF DATE		LAND DATE	04/07/2025 MLU
INC DATE		AG DATE	

VALUATION SUMMARY

VALUATION BY		STANDARD
Tax Group: 3	Tax Dist:	
BUILDING MARKET VALUE		265,015
TOTAL MARKET OB/XF VALUE		7,608
TOTAL LAND VALUE - MARKET		83,078
TOTAL MARKET VALUE		355,701
SOH/AGL Deduction		149,754
ASSESSED VALUE		205,947
TOTAL EXEMPTION VALUE	HX HB SX	100,722
BASE TAXABLE VALUE		105,225
TOTAL JUST VALUE		355,701
NCON VALUE		0
INCOME VALUE		
PREVIOUS YEAR MKT VALUE		359,657

PERMIT NUM	DESCRIPTION	AMT	ISSUED
000049536	Roof Replacement	9,100	04/01/2024
000048020	Electrical Servic	0	09/01/2023
10700	M H	125	02/01/1996

SALES DATA

OFF RECORD Number	DATE	TYPE INST	Q U	V I	RSN CD	SALE PRICE
1117/1301	4/20/2007	WD	Q	I		295,000
GRANTOR: MARVIN SCAFF						
GRANTEE: SUSAN GILES & DANIE						
1040/2622	3/09/2005	WD	Q	I		260,000
GRANTOR: CLINTON HERRICK						
GRANTEE: MARVIN SCAFF						

BUILDING NOTES

BUILDING DIMENSIONS

UOP= W28 S8 E4 S8 W6 S12 E10 N20 E20 N8$ BAS= S8 FGR= W20S24 E23 N19 W3 N5$ S5 E3 FST= S19 E13 UOP= E8 N16 W8 S16$ N19 W13$ E13 FOP= S3 E8 N40 W32 S16 E8 N10 E16 S2 E2 S6W2 S23$ N23 E2 N6 W2 N2 W16 S18$ PTR= N40 UOP= N4 W4 N4 FOP= N8 W4 S8 E4$ W4 S8 FUS= N24 FUS= N24 W16 S24 E16$ W16 UOP= N8 W28 S8 E4 S8E4 N8 E20$ W20 S8 FEP= W10 S12 E10 N12$ S16 E36$ E8$ S40$.

EXTRA FEATURES

LN	OB/XF CODE	DESCRIPTION	BLD	CAP	L	W	UNITS	UT	Adj R	ADJ UNIT PRICE	ORIG COND	YEAR ON	YEAR ACTUAL	Q	% COND	OB/XF MKT VALUE	NOTES
1	0166	CONC,PAVMT	0	100	20	36	720.00	UT	1.40	1.40	100	0	0	3	100	1,008	
2	0190	FPLC PF	0	100	0	0	1.00	UT	1,200.00	1,200.00	100	0	0	3	100	1,200	
3	9947	Septic	0	100	0	0	1.00	UT	3,000.00	3,000.00	100			3	100	3,000	
4	0296	SHED METAL	0	100	12	16	1.00	UT	0.00	0.00	100	0	0	3	100	800	
5	0294	SHED WOOD/	0	100	12	16	1.00	UT	0.00	0.00	100	1994	1994	3	100	800	
6	0294	SHED WOOD/	0	100	5	8	1.00	UT	0.00	0.00	100	1994	1994	3	100	300	
7	0040	BARN,POLE	0	100	18	24	1.00	UT	0.00	0.00	100	1994	1994	3	100	500	

LAND DESCRIPTION

TOTAL OB/XF 7,608

LN	USE CODE	CLS	LAND USE DESCRIPTION	CAP	RD	LOC ZONE	FRONT	DEPTH	TOT LND UTS	UNIT TYPE	DT	DPTH FACT	% COND	TOT ADJ	UNIT PRICE	ADJ UNIT PRICE	LAND VALUE	OTHER ADJUSTMENTS AND NOTES	YEAR	DENSITY	DECL	FRZ	YR	CONSRV
1	0100	C	SFR	100		A-1	0.00	0.00	7.95	AC		1.00	1.00	1.10	9,500.00	10,450.00	83,078							

REVIEW DATE 12/02/2024 BY JS Total Acres: 7.95 Total Land Value: 83,078 Market: 0 Agricultural: 0 Common: 83,078 PRINTED 11/19/2025 BY SYS