LOT 8 BLOCK B RUSSWOOD EST UNIT

844-649, WD 1499-64,

POPE ALLEN BERNARD SR/POPE BEVERLY ANN
164 SW KEVIN GLN
LAKE CITY, FL 32024

2026

10-4S-16-02853-278

COLUMBIA COUNTY PROPERTY

BUILDING CHARACTERISTICS

ELEMENT	CD	CONSTRUCTION
Exterior Wall	19	COMMON BRK 90
Exterior Wall	16	WD FR STUC 10
Roof Structur	08	IRREGULAR 100
Roof Cover	03	COMP SHNGL 100
Interior Wall	05	DRYWALL 100
Interior Floo	13	LAM/VNLPLK 80
Interior Floo	15	HARDTILE 20
Air Condition	03	CENTRAL 100
Heating Type	04	AIR DUCTED 100
Bedrooms		4 100
Bathrooms		3.5 100
Frame	02	WOOD FRAME 100
Stories	1.	1. 100
Architectual	05	CONV 100
Units		0 100
Condition Adj	03	03 100
Kitchen Adjus	02	02 100
Quality	06	06

DOR CODE	0100	SINGLE FAMILY	
MAP NUM		MKT AREA	06
NEIGHBORHOOD/LOC	10416.010	1.00/	

AREA TYPE	TOTAL GROSS AREA	PCT OF BASE	YEAR	TOT ADJ AREA	SUBAREA MARKET VALUE
BAS	2,195	100		2,195	258,586
FGR	845	55		465	54,780
FOP	84	30		25	2,945
FOP	161	30		48	5,655
FUS	950	100		950	111,917
TOTALS	4,235			3,683	433,882

MARKET ADJUSTMENTS

TYPE	MDL	EFF. AREA	TOT ADJ PTS	EFF. BASE RATE	REPL. COST NEW	AYB	EYB	ECON	FNCT		NORM	% COND
0100	01	3,683	124.8471	139.83	514,994	1999	2010	0	0	0	15.75	84.25

1 SINGLE FAM 100% - 2024 Heated Area: 3145 HX Base Yr 2024

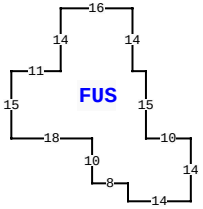

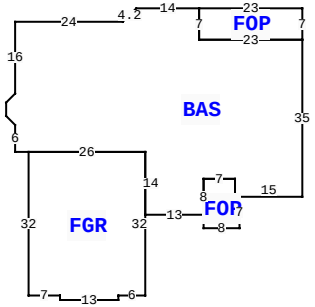

164 SW KEVIN GLN, LAKE CITY

BLD DATE		LGL DATE	
XF DATE		LAND DATE	04/03/2025 MLU
INC DATE		AG DATE	

VALUATION SUMMARY

VALUATION BY		STANDARD
Tax Group: 3	Tax Dist:	
BUILDING MARKET VALUE		433,882
TOTAL MARKET OB/XF VALUE		3,513
TOTAL LAND VALUE - MARKET		35,000
TOTAL MARKET VALUE		472,395
SOH/AGL Deduction		0
ASSESSED VALUE		472,395
TOTAL EXEMPTION VALUE	HX HB 13	472,395
BASE TAXABLE VALUE		0
TOTAL JUST VALUE		472,395
NCON VALUE		0
INCOME VALUE		
PREVIOUS YEAR MKT VALUE		477,803

PERMIT NUM	DESCRIPTION	AMT	ISSUED
14908	SFR	485	01/04/1999

SALES DATA

OFF RECORD Number	DATE	TYPE INST	Q U	V I	RSN CD	SALE PRICE
1499/64	9/12/2023	WD	Q	I	01	565,000
GRANTOR: HICKMAN TREVOR E						
GRANTEE: POPE ALLEN BERNARD						
0844/0649	8/19/1997	WD	Q	V		20,000
GRANTOR: BAILEY						
GRANTEE: HICKMAN						

BUILDING NOTES

BUILDING DIMENSIONS

BAS= W24 S16 L2 D2 S3 D2 R2 S6 E3 FGR= S32 E7 S1 E13 N1 E6 N32 W26$ E26 S14 E13 FOP= S3 E8 N7 W1 N4 W7 S8$ N8 E7 S4 E15 N35 FOP= N7 W23 S7 E23$ W23 N7 W14 L3 D3 $ PTR= N40 FUS= N14 W10 N15 W3 N14 W16 S14 W11 S15 E18 S10 E8 S4 E14$ S40$.

EXTRA FEATURES

LN	OB/XF CODE	DESCRIPTION	BLD	CAP	L	W	UNITS	UT	Adj R	ADJ UNIT PRICE	ORIG COND	YEAR ON	YEAR ACTUAL	Q	% COND	OB/XF MKT VALUE	NOTES
1	0166	CONC,PAVMT	0	100	0	0	2,342.00	UT	1.50	1.50	100	1999	1999	3	100	3,513	

LAND DESCRIPTION

TOTAL OB/XF 3,513

LN	USE CODE	CLS	LAND USE DESCRIPTION	CAP	RD	LOC ZONE	FRONT	DEPTH	TOT LND UTS	UNIT TYPE	DT	DPTH FACT	% COND	TOT ADJ	UNIT PRICE	ADJ UNIT PRICE	LAND VALUE	OTHER ADJUSTMENTS AND NOTES	YEAR	DENSITY	DECL	FRZ	YR	CONSRV
1	0100	C	SFR	100		RSF-1	0.00	0.00	1.00	LT		1.00	1.00	1.00	35,000.00	35,000.00	35,000							

REVIEW DATE 01/19/2024 BY KS Total Acres: 1.00 Total Land Value: 35,000 Market: 0 Agricultural: 0 Common: 35,000 PRINTED 11/18/2025 BY SYS