SE1/4. PB 1182-1428, DC 1182 -1431, DC 1196-491, PB 1196-492, PR 1196-2420, WD 1352-527

J.I.T FARM, LLC
17102 S US HIGHWAY 441
LAKE CITY, FL 32024

2026

09-7S-16-04167-000

COLUMBIA COUNTY PROPERTY

BUILDING CHARACTERISTICS

ELEMENT	CD	CONSTRUCTION
Exterior Wall	19	COMMON BRK 90
Exterior Wall	31	VINYL SID 10
Roof Structur	03	GABLE/HIP 100
Roof Cover	12	MODULAR MT 100
Interior Wall	05	DRYWALL 100
Interior Floo	14	CARPET 90
Interior Floo	08	SHT VINYL 10
Air Condition	03	CENTRAL 100
Heating Type	09	ENG F AIR 100
Bedrooms		3 100
Bathrooms		4 100
Frame	01	NONE 100
Stories	1.5	1.5 100
Architectual	05	CONV 100
Units		0 100
Condition Adj	03	03 100
Kitchen Adjus	01	01 100
Quality	07	07
DOR CODE	5000	IMPROVED AG
MAP NUM		MKT AREA 02
NEIGHBORHOOD/LOC	9716.00	1.00/

AREA TYPE	TOTAL GROSS AREA	PCT OF BASE	YEAR	TOT ADJ AREA	SUBAREA MARKET VALUE
BAS	483	100		483	45,140
BAS	1,680	100		1,680	157,008
FBM	1,636	80		1,309	122,335
FOP	216	30		65	6,075
FUS	830	100		830	77,569
PTO	200	5		10	935
TOTALS	5,045			4,377	409,061

MARKET ADJUSTMENTS

TYPE	MDL	EFF. AREA	TOT ADJ PTS	EFF. BASE RATE	REPL. COST NEW	AYB	EYB	ECON	FNCT		NORM	% COND
0100	01	4,377	128.3782	143.78	629,325	1990	1990	0	0	0	35.00	65.00

1 SINGLE FAM 0% - 0 Heated Area: 4629 HX Base Yr

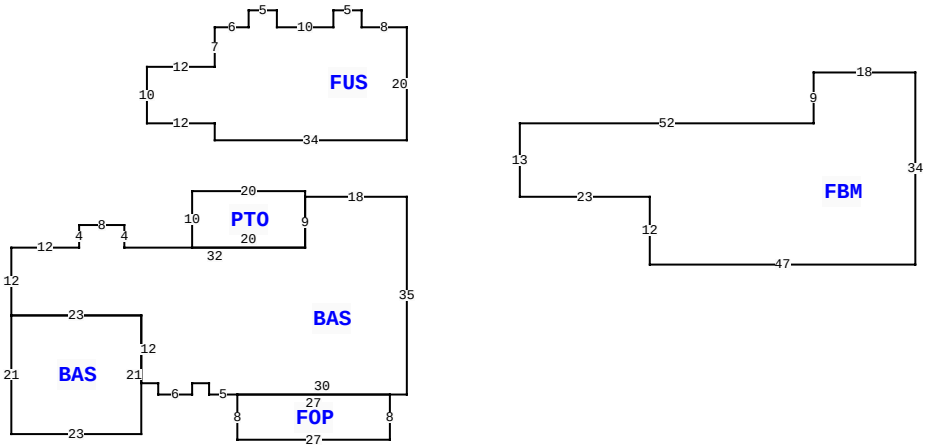

501 SW TERRELL CT, FORT WHITE

BLD DATE		LGL DATE	
XF DATE		LAND DATE	04/10/2025 MLU
INC DATE		AG DATE	

VALUATION SUMMARY

VALUATION BY	STANDARD
Tax Group: 3	Tax Dist:
BUILDING MARKET VALUE	409,061
TOTAL MARKET OB/XF VALUE	16,561
TOTAL LAND VALUE - MARKET	720,000
TOTAL MARKET VALUE	474,642
SOH/AGL Deduction	60,322
ASSESSED VALUE	414,320
TOTAL EXEMPTION VALUE	0
BASE TAXABLE VALUE	414,320
TOTAL JUST VALUE	1,145,622
NCON VALUE	0
INCOME VALUE	
PREVIOUS YEAR MKT VALUE	1,146,566

LAND:1:1: ALSO OWNS 4229-000

PERMIT NUM	DESCRIPTION	AMT	ISSUED

SALES DATA

OFF RECORD Number	DATE	TYPE INST	Q U	V I	RSN CD	SALE PRICE
1352/0530	1/23/2018	WD	U	I	11	100
GRANTOR: J WAYNE & INGE REYELT						
GRANTEE: J I T FARM LLC						
1352/0527	1/23/2018	WD	U	I	11	100
GRANTOR: WAYNE MOSELEY						
GRANTEE: J WAYNE & INGE REYE						

BUILDING NOTES

BUILDING DIMENSIONS

BAS= W18 PTO= N1 W20 S10 E20N9$S9 W32 N4 W8 S4 W12 S12 BAS= E23 S21 W23 N21$ E23 S12E3 S2 E6 N2 E3 S2 E5 FOP= S8 E27 N8 W27$ E30 N35 $ PTR=N30 FUS= W8N3W5S3 W10 N3 W5 S3 W6S7 W12 S10 E12 S3 E34 N20$ S30$ PTR=E20 FBM= N13 E52 N9 E18S34 W47 N12W23$ W20$.

EXTRA FEATURES

LN	OB/XF CODE	DESCRIPTION	BLD	CAP	L	W	UNITS	UT	Adj R	ADJ UNIT PRICE	ORIG COND	YEAR ON	YEAR ACTUAL	Q	% COND	OB/XF MKT VALUE	NOTES
1	0180	FPLC 1STRY	0	0	0	0	2.00	UT	2,000.00	2,000.00	100	0	0	3	100	4,000	
2	0166	CONC,PAVMT	0	0	30	21	630.00	UT	1.40	1.40	100	0	0	3	100	882	
3	0210	GARAGE U	0	0	13	17	221.00	UT	18.00	18.00	60	1993	1993	3	60	2,387	
4	0260	PAVEMENT-A	0	0	8	1130	9,040.00	UT	1.10	1.10	50	1993	1993	3	50	4,972	
5	0030	BARN,MT	0	0	24	36	864.00	UT	5.00	5.00	100	2006	2006	3	100	4,320	

LAND DESCRIPTION

TOTAL OB/XF 16,561

LN	USE CODE	CLS	LAND USE DESCRIPTION	CAP	RD	LOC ZONE	FRONT	DEPTH	TOT LND UTS	UNIT TYPE	DT	DPTH FACT	% COND	TOT ADJ	UNIT PRICE	ADJ UNIT PRICE	LAND VALUE	OTHER ADJUSTMENTS AND NOTES	YEAR	DENSITY	DECL	FRZ	YR	CONSRV
1	6200	A	PASTURE 3	0		A-1	0.00	0.00	159.00	AC		1.00	1.00	1.00	280.00	280.00	44,520							
2	9910	M	MKT.VAL.AG	0		A-1	0.00	0.00	159.00	AC		1.00	1.00	1.00	4,500.00	4,500.00	715,500							
3	0100	C	SFR	0		A-1	0.00	0.00	1.00	AC		1.00	1.00	1.00	4,500.00	4,500.00	4,500							

REVIEW DATE 06/29/2015 BY DF Total Acres: 160.00 Total Land Value: 49,020 Market: 715,500 Agricultural: 44,520 Common: 4,500 PRINTED 11/19/2025 BY SYS