LOT 9 DOE RUN S/D UNREC:
COMM NW COR OF NW1/4, RUN S 540
1072.79 FT, E 1685.64 FT FOR POB

DINDIAL HANS WALTER/BINGHAM-DINDIAL MARY SHAUN
P O BOX 248
FORT WHITE, FL 32038-0248

2026

09-6S-16-03804-109

COLUMBIA COUNTY PROPERTY

BUILDING CHARACTERISTICS

ELEMENT	CD	CONSTRUCTION
Exterior Wall	05	AVERAGE 100
Roof Structur	03	GABLE/HIP 100
Roof Cover	12	MODULAR MT 100
Interior Wall	04	PLYWOOD 100
Interior Floo	02	MIN PLYWD 100
Air Condition	02	WINDOW 100
Heating Type	02	CONVECTION 100
Bedrooms		1 100
Bathrooms		1 100
Frame	02	WOOD FRAME 100
Stories	1.	1. 100
Architectual	05	CONV 100
Units		0 100
Quality	05	05

DOR CODE	0100	SINGLE FAMILY	
MAP NUM		MKT AREA	02
NEIGHBORHOOD/LOC	9616.0100	1.00/	

AREA TYPE	TOTAL GROSS AREA	PCT OF BASE	YEAR	TOT ADJ AREA	SUBAREA MARKET VALUE
BAS	432	100		432	39,582
FOP	144	30		43	3,940
FST	144	55		79	7,239
FST	144	55		79	7,239
TOTALS	864			633	57,999

MARKET ADJUSTMENTS

TYPE	MDL	EFF. AREA	TOT ADJ PTS	EFF. BASE RATE	REPL. COST NEW	AYB	EYB	ECON	FNCT		NORM	% COND
0100	01	633	103.8800	116.35	73,650	2009	2008	0	0	0	21.25	78.75

1 SINGLE FAM 100% - 2009 Heated Area: 432 HX Base Yr 2009

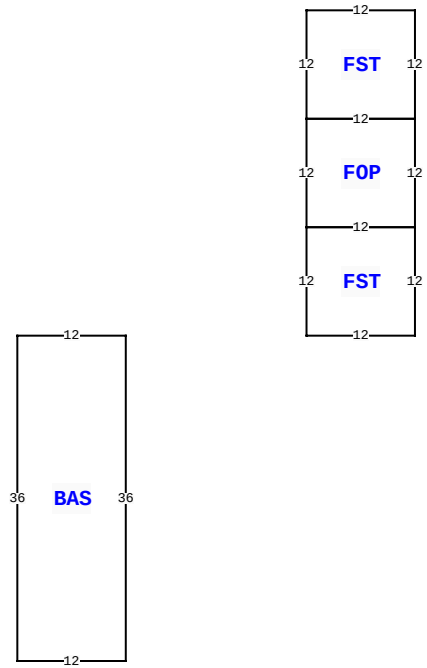

555 SW LAUMAN GLN, FORT WHITE

BLD DATE		LGL DATE	
XF DATE		LAND DATE	04/07/2025 MLU
INC DATE		AG DATE	

VALUATION SUMMARY

VALUATION BY		STANDARD
Tax Group: 3	Tax Dist:	
BUILDING MARKET VALUE		57,999
TOTAL MARKET OB/XF VALUE		12,110
TOTAL LAND VALUE - MARKET		95,095
TOTAL MARKET VALUE		165,204
SOH/AGL Deduction		61,701
ASSESSED VALUE		103,503
TOTAL EXEMPTION VALUE	HX HB	50,722
BASE TAXABLE VALUE		52,781
TOTAL JUST VALUE		165,204
NCON VALUE		0
INCOME VALUE		
PREVIOUS YEAR MKT VALUE		166,125

PERMIT NUM	DESCRIPTION	AMT	ISSUED
31690	SFR	491	01/14/2014
26324	GARAGE	191	10/15/2007

SALES DATA

OFF RECORD Number	DATE	TYPE INST	Q U	V I	RSN CD	SALE PRICE
1115/2688	4/04/2007	WD	Q	V		99,000
GRANTOR: SCOTT & ELLEN RUSSELL						
GRANTEE: HANS & MARY DINDIAL						
0996/2841	9/26/2003	WD	Q	V		34,000
GRANTOR: ALLEN M & DEBRA P STA						
GRANTEE: SCOTT & ELLEN L RUS						

BUILDING NOTES

BUILDING DIMENSIONS

BAS= W12 S36 E12 N36$ PTR= E20 FST= E12 N12 FOP= N12 FST= N12 W12 S12 E12$ W12 S12 E12$ W12 S12$ W20$.

EXTRA FEATURES

LN	OB/XF CODE	DESCRIPTION	BLD	CAP	L	W	UNITS	UT	Adj R	ADJ UNIT PRICE	ORIG COND	YEAR ON	YEAR ACTUAL	Q	% COND	OB/XF MKT VALUE	NOTES
1	0040	BARN,POLE	0	100	36	36	1,296.00	UT	3.00	3.00	100	2008	2008	3	100	3,888	
2	0294	SHED WOOD/	0	100	12	12	144.00	UT	7.50	7.50	100	2008	2008	3	100	1,080	
3	0252	LEAN-TO W/	0	100	0	0	1.00	UT	0.00	0.00	100	2014	2014	3	100	50	
4	0251	LEAN TO W/	0	100	0	0	1.00	UT	0.00	0.00	100	2014	2014	3	100	1,260	
5	0040	BARN,POLE	0	100	0	0	1.00	UT	0.00	0.00	100	2014	2014	3	100	5,832	

LAND DESCRIPTION

TOTAL OB/XF 12,110

LN	USE CODE	CLS	LAND USE DESCRIPTION	CAP	RD	LOC ZONE	FRONT	DEPTH	TOT LND UTS	UNIT TYPE	DT	DPTH FACT	% COND	TOT ADJ	UNIT PRICE	ADJ UNIT PRICE	LAND VALUE	OTHER ADJUSTMENTS AND NOTES	YEAR	DENSITY	DECL	FRZ	YR	CONSRV
1	0100	C	SFR	100		A-1	0.00	0.00	10.01	AC		1.00	1.00	1.00	9,500.00	9,500.00	95,095							

REVIEW DATE 05/18/2015 BY DF Total Acres: 10.01 Total Land Value: 95,095 Market: 0 Agricultural: 0 Common: 95,095 PRINTED 11/18/2025 BY SYS