COMM AT SW COR OF NE1/4, RUN E 4
POB, RUN NORTH 284.46 FT, E 389.
561.14 FT, W 389.01 FT, NORTH 27

WALKER KENNETH/WALKER MELINDA
1149 SW COUNTY ROAD 240
LAKE CITY, FL 32025

2026

09-5S-17-09171-007

COLUMBIA COUNTY PROPERTY

BUILDING CHARACTERISTICS

ELEMENT	CD	CONSTRUCTION
Exterior Wall	19	COMMON BRK 100
Roof Structur	03	GABLE/HIP 100
Roof Cover	03	COMP SHNGL 100
Interior Wall	05	DRYWALL 100
Interior Floo	14	CARPET 90
Interior Floo	11	CLAY TILE 10
Air Condition	03	CENTRAL 100
Heating Type	04	AIR DUCTED 100
Bedrooms		3 100
Bathrooms		2 100
Frame	02	WOOD FRAME 100
Stories	1.	1. 100
Architectual	05	CONV 100
Units		0 100
Condition Adj	03	03 100
Kitchen Adjus	01	01 100
Quality	07	07
DOR CODE	5000	IMPROVED AG
MAP NUM		MKT AREA 02
NEIGHBORHOOD/LOC	9517.00	1.00/

AREA TYPE	TOTAL GROSS AREA	PCT OF BASE	YEAR	TOT ADJ AREA	SUBAREA MARKET VALUE
BAS	1,868	100		1,868	207,856
FGR	484	55		266	29,598
FOP	96	30		29	3,227
FOP	330	30		99	11,016
TOTALS	2,778			2,262	251,698

MARKET ADJUSTMENTS

TYPE	MDL	EFF. AREA	TOT ADJ PTS	EFF. BASE RATE	REPL. COST NEW	AYB	EYB	ECON	FNCT		NORM	% COND
0100	01	2,262	124.1856	139.09	314,622	2005	2005	0	0	0	20.00	80.00

1 SINGLE FAM 100% - 2006 Heated Area: 1868 HX Base Yr 2006

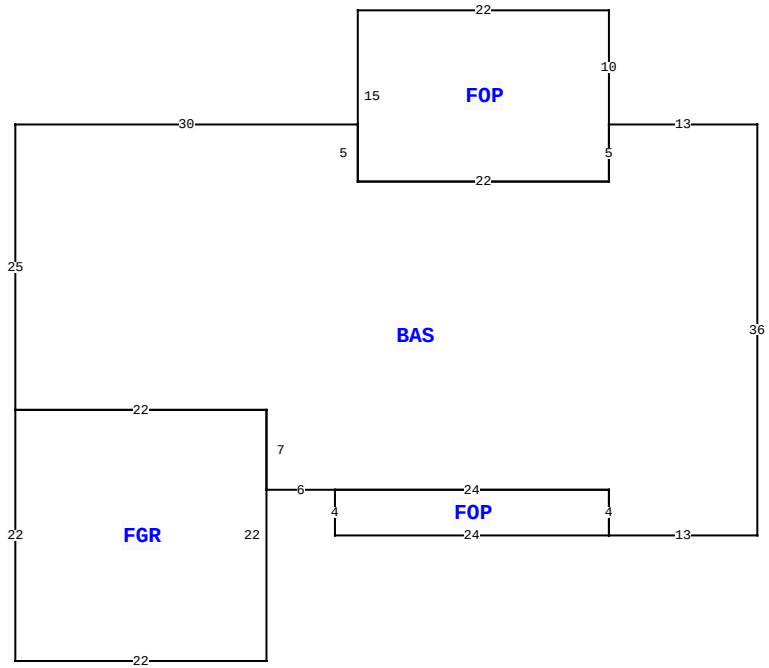

1149 SW COUNTY ROAD 240 , LAKE CITY

BLD DATE		LGL DATE	
XF DATE		LAND DATE	05/20/2024 MLU
INC DATE		AG DATE	

VALUATION SUMMARY

VALUATION BY		STANDARD
Tax Group: 3	Tax Dist:	
BUILDING MARKET VALUE		251,698
TOTAL MARKET OB/XF VALUE		5,583
TOTAL LAND VALUE - MARKET		50,100
TOTAL MARKET VALUE		268,404
SOH/AGL Deduction		85,343
ASSESSED VALUE		183,061
TOTAL EXEMPTION VALUE	HX HB	50,722
BASE TAXABLE VALUE		132,339
TOTAL JUST VALUE		307,381
NCON VALUE		0
INCOME VALUE		
PREVIOUS YEAR MKT VALUE		310,527

PERMIT NUM	DESCRIPTION	AMT	ISSUED
000052060	Roof Replacement	18,500	01/14/2025
22609	SFR	507	12/16/2004

SALES DATA

OFF RECORD Number	DATE	TYPE INST	Q / U	V / I	RSN CD	SALE PRICE
1029/1845	11/01/2004	WD	Q	V	03	100

GRANTOR: KEEN

GRANTEE: WALKER (SON-IN-LAW)

BUILDING NOTES

BUILDING DIMENSIONS

BAS= W13 FOP= N10 W22 S15 E22 N5$ S5 W22 N5 W30 S25 FGR= S22 E22 N22 W22$ E22 S7 E6 FOP= S4 E24 N4 W24$ E24 S4 E13 N36$.

EXTRA FEATURES

LN	OB/XF CODE	DESCRIPTION	BLD	CAP	L	W	UNITS	UT	Adj R	ADJ UNIT PRICE	ORIG COND	YEAR ON	YEAR ACTUAL	Q	% COND	OB/XF MKT VALUE	NOTES
1	0166	CONC,PAVMT	0	100	0	0	1,753.00	UT	2.50	2.50	100	2005	2005	3	100	4,383	
2	0190	FPLC PF	0	100	0	0	1.00	UT	1,200.00	1,200.00	100	2017	2017	3	100	1,200	

LAND DESCRIPTION

TOTAL OB/XF 5,583

LN	USE CODE	CLS	LAND USE DESCRIPTION	CAP	RD	LOC ZONE	FRONT	DEPTH	TOT LND UTS	UNIT TYPE	DT	DPTH FACT	% COND	TOT ADJ	UNIT PRICE	ADJ UNIT PRICE	LAND VALUE	OTHER ADJUSTMENTS AND NOTES	YEAR	DENSITY	DECL	FRZ	YR	CONSRV
1	0100	C	SFR	100			0.00	0.00	1.00	AC		1.00	1.00	1.00	10,000.00	10,000.00	10,000							
2	6200	A	PASTURE 3	0			0.00	0.00	4.01	AC		1.00	1.00	1.00	280.00	280.00	1,123							
3	9910	M	MKT.VAL.AG	0			0.00	0.00	4.01	AC		1.00	1.00	1.00	10,000.00	10,000.00	40,100							

REVIEW DATE 03/04/2025 BY jerry Total Acres: 5.01 Total Land Value: 11,123 Market: 40,100 Agricultural: 1,123 Common: 10,000 PRINTED 11/07/2025 BY SYS