N 880 FT OF N1/2 OF NE1/4.
ORB 378-343,

KEEN JAMES D/KEEN SHIRLEY J
1245 SW COUNTY RD 240
LAKE CITY, FL 32024

2026

09-5S-17-09168-000

COLUMBIA COUNTY PROPERTY

BUILDING CHARACTERISTICS

ELEMENT	CD	CONSTRUCTION
Exterior Wall	10	ABOVE AVG. 70
Exterior Wall	19	COMMON BRK 30
Roof Structur	08	IRREGULAR 100
Roof Cover	03	COMP SHNGL 100
Interior Wall	05	DRYWALL 100
Interior Floo	14	CARPET 60
Interior Floo	12	HARDWOOD 40
Air Condition	03	CENTRAL 100
Heating Type	04	AIR DUCTED 100
Bedrooms		3 100
Bathrooms		2.5 100
Frame	02	WOOD FRAME 100
Stories	1.5	1.5 100
Architectual	05	CONV 100
Units		0 100
Condition Adj	03	03 100
Kitchen Adjus	01	01 100
Quality	05	05
DOR CODE	5000	IMPROVED AG
MAP NUM		MKT AREA 02
NEIGHBORHOOD/LOC	9517.00	1.00/

AREA TYPE	TOTAL GROSS AREA	PCT OF BASE	YEAR	TOT ADJ AREA	SUBAREA MARKET VALUE
BAS	1,513	100		1,513	159,258
FDU	864	60		518	54,524
FGR	648	55		356	37,472
FOP	192	30		58	6,105
FOP	355	30		106	11,157
FUS	408	100		408	42,946
UOP	440	20		88	9,263
TOTALS	4,420			3,047	320,726

MARKET ADJUSTMENTS

TYPE	MDL	EFF. AREA	TOT ADJ PTS	EFF. BASE RATE	REPL. COST NEW	AYB	EYB	ECON	FNCT		NORM	% COND
0100	01	3,047	118.9608	133.24	405,982	2004	2004	0	0	0	21.00	79.00

1 SINGLE FAM 100% - 2005 Heated Area: 1921 HX Base Yr 2005

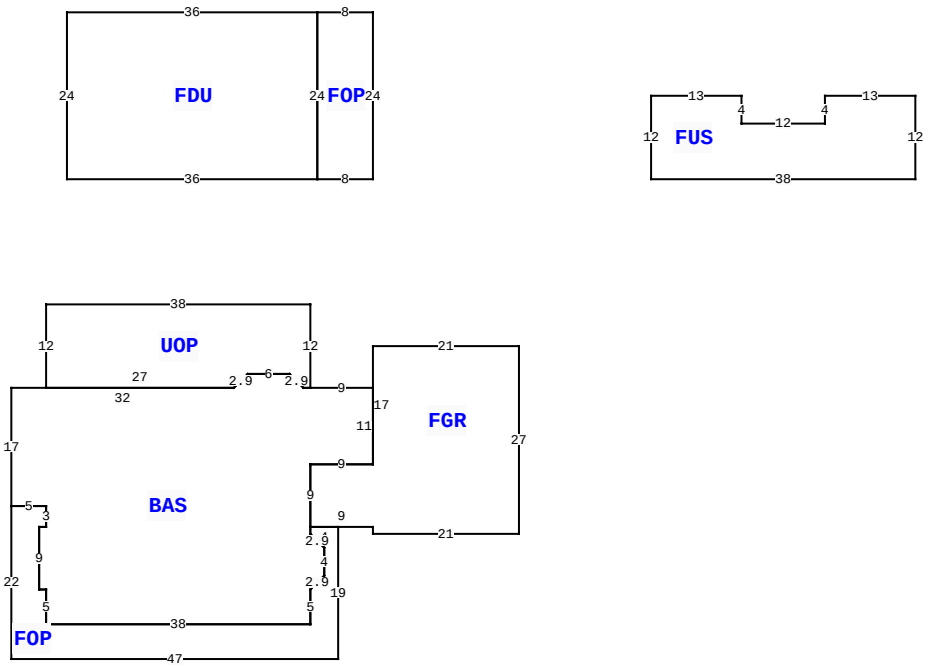

1245 SW COUNTY ROAD 240 , LAKE CITY

BLD DATE		LGL DATE	
XF DATE		LAND DATE	04/10/2025 MLU
INC DATE		AG DATE	

VALUATION SUMMARY

VALUATION BY		STANDARD
Tax Group: 3	Tax Dist:	
BUILDING MARKET VALUE		320,726
TOTAL MARKET OB/XF VALUE		0
TOTAL LAND VALUE - MARKET		239,985
TOTAL MARKET VALUE		341,198
SOH/AGL Deduction		119,141
ASSESSED VALUE		222,057
TOTAL EXEMPTION VALUE	HX HB	50,722
BASE TAXABLE VALUE		171,335
TOTAL JUST VALUE		560,711
NCON VALUE		0
INCOME VALUE		
PREVIOUS YEAR MKT VALUE		564,771

PERMIT NUM	DESCRIPTION	AMT	ISSUED
000051546	Roof Replacement	10,755	11/18/2024
000048515	Roof Replacement	30,915	10/27/2023
21638	SFR	574	03/19/2004

SALES DATA

OFF RECORD Number	DATE	TYPE INST	Q U	V I	RSN CD	SALE PRICE

BUILDING NOTES

BUILDING DIMENSIONS

BAS= W9 UOP= N12 W38 S12 E27 R2 U2 E6 D2 R2 E1$ W1 L2 U2 W6 D2 L2 W32 S17 FOP= S22 E47 N19 W4 S1 D2 R2 S4 L2 D2 S5 W38 N5 W1 N9 E1 N3 W5$ E5 S3 W1 S9 E1 S5 E38 N5 U2 R2 N4 L2 U2 N1 FGR= E9 S1 E21 N27 W21 S17 W9 S9$ N9 E9 N11$ PTR= N30 FOP= N24 W8 FDU= W36 S24 E36 N24$ S24 E8$ S30$ PTR= N30 E40 FUS= E38 N12 W13 S4 W12 N4 W13 S12$ S30 W40$.

EXTRA FEATURES

LN	OB/XF CODE	DESCRIPTION	BLD	CAP	L	W	UNITS	UT	Adj R	ADJ UNIT PRICE	ORIG COND	YEAR ON	YEAR ACTUAL	Q	% COND	OB/XF MKT VALUE	NOTES

LAND DESCRIPTION

TOTAL OB/XF 0

LN	USE CODE	CLS	LAND USE DESCRIPTION	CAP	RD	LOC ZONE	FRONT	DEPTH	TOT LND UTS	UNIT TYPE	DT	DPTH FACT	% COND	TOT ADJ	UNIT PRICE	ADJ UNIT PRICE	LAND VALUE	OTHER ADJUSTMENTS AND NOTES	YEAR	DENSITY	DECL	FRZ	YR	CONSRV
1	5910	A	SWAMP/CYPRES	0		A-1	0.00	0.00	7.00	AC		1.00	1.00	1.00	40.00	40.00	280							
2	5200	A	CROPLAND 2	0		A-1	0.00	0.00	33.33	AC		1.00	1.00	1.00	370.00	370.00	12,332							
3	6200	A	PASTURE 3	0		A-1	0.00	0.00	12.00	AC		1.00	1.00	1.00	280.00	280.00	3,360							
4	9910	M	MKT.VAL.AG	0		A-1	0.00	0.00	52.33	AC		1.00	1.00	1.00	4,500.00	4,500.00	235,485							
5	0100	C	SFR	100			0.00	0.00	1.00	AC		1.00	1.00	1.00	4,500.00	4,500.00	4,500							

REVIEW DATE 12/26/2024 BY jerry Total Acres: 53.33 Total Land Value: 20,472 Market: 235,485 Agricultural: 15,972 Common: 4,500 PRINTED 10/03/2025 BY SYS