S1/2 OF LOT 7 MAULDIN FARMS S/D.

785-1368, WD 1055-528, WD 1374-1

KARI MARY E
7195 SW COUNTY ROAD 240
LAKE CITY, FL 32024

2026

09-5S-16-03497-107

BUILDING CHARACTERISTICS

ELEMENT	CD	CONSTRUCTION
Exterior Wall	32	HARDIE BRD 100
Roof Structur	03	GABLE/HIP 100
Roof Cover	03	COMP SHNGL 100
Interior Wall	05	DRYWALL 100
Interior Floo	13	LAM/VNLPLK 80
Interior Floo	15	HARDTILE 20
Air Condition	03	CENTRAL 100
Heating Type	04	AIR DUCTED 100
Bedrooms		3 100
Bathrooms		2 100
Frame	02	WOOD FRAME 100
Stories	1.5	1.5 100
Units		0 100
Quality	05	05
DOR CODE	0100	SINGLE FAMILY
MAP NUM		MKT AREA 01
NEIGHBORHOOD/LOC	9516.0200	1.00/

AREA TYPE	TOTAL GROSS AREA	PCT OF BASE	YEAR	TOT ADJ AREA	SUBAREA MARKET VALUE
BAS	1,444	100		1,444	178,995
FGR	484	55		266	32,972
FOP	36	30		11	1,364
FOP	160	30		48	5,950
UUS	644	50		322	39,914
TOTALS	2,768			2,091	259,196

MARKET ADJUSTMENTS

TYPE	MDL	EFF. AREA	TOT ADJ PTS	EFF. BASE RATE	REPL. COST NEW	AYB	EYB	ECON	FNCT		NORM	% COND
0100	01	2,091	117.7386	131.87	275,740	2019	2019	0	0	0	6.00	94.00

1 SINGLE FAM 100% - 2024 Heated Area: 1444 HX Base Yr 2024

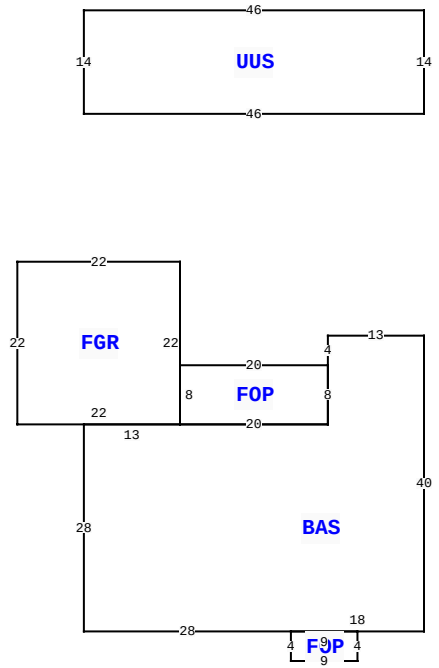

7195 SW COUNTY ROAD 240 , LAKE CITY

BLD DATE		LGL DATE	
XF DATE		LAND DATE	04/26/2022 MLU
INC DATE		AG DATE	

COLUMBIA COUNTY PROPERTY

PAGE 1 of 1 3

VALUATION SUMMARY

VALUATION BY		STANDARD
Tax Group: 3	Tax Dist:	
BUILDING MARKET VALUE		259,196
TOTAL MARKET OB/XF VALUE		1,238
TOTAL LAND VALUE - MARKET		17,500
TOTAL MARKET VALUE		277,934
SOH/AGL Deduction		0
ASSESSED VALUE		277,934
TOTAL EXEMPTION VALUE	HX HB	50,722
BASE TAXABLE VALUE		227,212
TOTAL JUST VALUE		277,934
NCON VALUE		0
INCOME VALUE		
PREVIOUS YEAR MKT VALUE		280,691

PERMIT NUM	DESCRIPTION	AMT	ISSUED
37907	SFR	975	03/26/2019

SALES DATA

OFF RECORD Number	DATE	TYPE INST	Q U	V I	RSN CD	SALE PRICE
1541/1756	6/04/2025	QC	U	I	11	100
GRANTOR: KARI MARY E						
GRANTEE: KARI MARY E						
1492/499	6/01/2023	LE	U	I	14	100
GRANTOR: KARI MARY E						
GRANTEE: KARI MARY E (ENH LE						

BUILDING NOTES

BUILDING DIMENSIONS

BAS= W13 S4 FOP= W20 S8 E20 N8$ S8 W20 FGR= N22 W22 S22 E22$W13 S28 E28 FOP= S4 E9 N4 W9$ E18 N40$ PTR= N30 UUS= N14 W46 S14 E46$ S30$.

EXTRA FEATURES

LN	OB/XF CODE	DESCRIPTION	BLD	CAP	L	W	UNITS	UT	Adj R	ADJ UNIT PRICE	ORIG COND	YEAR ON	YEAR ACTUAL	Q	% COND	OB/XF MKT VALUE	NOTES
1	0166	CONC,PAVMT	0	100	22	25	550.00	UT	2.25	2.25	100	2019	2019	3	100	1,238	

LAND DESCRIPTION

TOTAL OB/XF 1,238

LN	USE CODE	CLS	LAND USE DESCRIPTION	CAP	RD	LOC ZONE	FRONT	DEPTH	TOT LND UTS	UNIT TYPE	DT	DPTH FACT	% COND	TOT ADJ	UNIT PRICE	ADJ UNIT PRICE	LAND VALUE	OTHER ADJUSTMENTS AND NOTES	YEAR	DENSITY	DECL	FRZ	YR	CONSRV
1	0100	C	SFR	100		A-1	0.00	0.00	0.50	LT		1.00	1.00	1.00	35,000.00	35,000.00	17,500							

REVIEW DATE 12/17/2019 BY HC Total Acres: 2.51 Total Land Value: 17,500 Market: 0 Agricultural: 0 Common: 17,500 PRINTED 11/07/2025 BY SYS