E1/2 OF SW1/4 OF SW1/4 EX BEG AT
E1/2 OF SW1/4 OF SW1/4, E 331.22
FT, E 231.22 FT, N 500 FT, W 231

BALDREE VICKY RENEE
375 SE GATOR LN
LAKE CITY, FL 32025

2026

09-4S-17-08301-032

COLUMBIA COUNTY PROPERTY

BUILDING CHARACTERISTICS

ELEMENT	CD	CONSTRUCTION
Exterior Wall	19	COMMON BRK 70
Exterior Wall	31	VINYL SID 30
Roof Structur	03	GABLE/HIP 100
Roof Cover	03	COMP SHNGL 100
Interior Wall	05	DRYWALL 100
Interior Floo	14	CARPET 90
Interior Floo	15	HARDTILE 10
Air Condition	03	CENTRAL 100
Heating Type	04	AIR DUCTED 100
Bedrooms		3 100
Bathrooms		2 100
Frame	01	NONE 100
Stories	1.	1. 100
Architectual	05	CONV 100
Units		0 100
Condition Adj	02	02 100
Kitchen Adjus	01	01 100
Quality	05	05
DOR CODE	5000	IMPROVED AG
MAP NUM		MKT AREA 06
NEIGHBORHOOD/LOC	9417.00	1.00/

AREA TYPE	TOTAL GROSS AREA	PCT OF BASE	YEAR	TOT ADJ AREA	SUBAREA MARKET VALUE
BAS	1,840	100		1,840	141,759
FGR	506	55		278	21,418
FOP	40	30		12	924
FUS	506	100		506	38,984
UOP	68	20		14	1,079
TOTALS	2,960			2,650	204,164

MARKET ADJUSTMENTS

TYPE	MDL	EFF. AREA	TOT ADJ PTS	EFF. BASE RATE	REPL. COST NEW	AYB	EYB	ECON	FNCT		NORM	% COND
0100	01	2,650	95.4720	106.93	283,364	1999	1999	0	0	0	27.95	72.05

1 SINGLE FAM 100% - 2000 Heated Area: 2346 HX Base Yr 2000

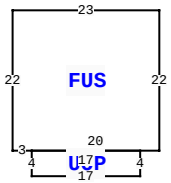

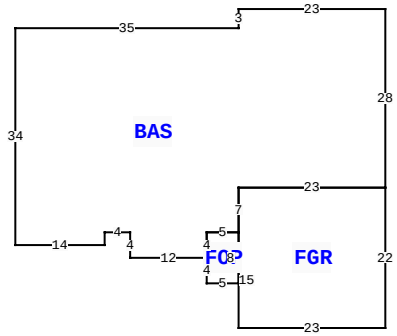

375 SE GATOR LN, LAKE CITY

BLD DATE		LGL DATE	
XF DATE		LAND DATE	04/09/2025 MLU
INC DATE		AG DATE	

VALUATION SUMMARY

VALUATION BY		STANDARD
Tax Group: 2	Tax Dist:	
BUILDING MARKET VALUE		204,164
TOTAL MARKET OB/XF VALUE		1,105
TOTAL LAND VALUE - MARKET		46,248
TOTAL MARKET VALUE		211,912
SOH/AGL Deduction		67,996
ASSESSED VALUE		143,916
TOTAL EXEMPTION VALUE	HX HB	50,722
BASE TAXABLE VALUE		93,194
TOTAL JUST VALUE		251,517
NCON VALUE		0
INCOME VALUE		
PREVIOUS YEAR MKT VALUE		254,549

SALE:7:2: THEM

SALE:9:1: 10 ACRES MKT=16800

SALE:8:1: REPO

SALE:7:1: BOUGHT THE JOINING 10 AC LATER & COMBINE

PERMIT NUM	DESCRIPTION	AMT	ISSUED
000053801	Generator		08/07/2025
000047629	Remodel	23,420	07/10/2023
000043515	Roof Replacement	12,993	01/12/2022
13984	SFR	365	05/08/1998
8020	PUMP/UTPOL	30	01/31/1994

SALES DATA

OFF RECORD Number	DATE	TYPE INST	Q U	V I	RSN CD	SALE PRICE
1384/1323	5/10/2019	LE	U	I	14	100
GRANTOR: VICKY RENEE BALDREE (						
GRANTEE: SHANNA LUPICA, MICH						
1315/1577	5/19/2016	WD	U	I	37	28,500
GRANTOR: RICHARD K WISNER						
GRANTEE: MELVIN M & VICKY RE						

BUILDING NOTES

BUILDING DIMENSIONS

BAS= W23 S3 W35 S34 E14 N2 E4 S4 E12 FOP= S4 E5 N8 W5 S4$ N4 E5 FGR= S15 E23 N22 W23 S7$ N7 E23 N28$ PTR= N30 FUS= N22 W23 S22 E3 UOP= S4 E17 N4 W17$ E20 $ S30$.

EXTRA FEATURES

LN	OB/XF CODE	DESCRIPTION	BLD	CAP	L	W	UNITS	UT	Adj R	ADJ UNIT PRICE	ORIG COND	YEAR ON	YEAR ACTUAL	Q	% COND	OB/XF MKT VALUE	NOTES
1	0010	BARN,BLK	0	100	12	24	1.00	UT	0.00	0.00	100	1994	1994	3	100	800	
2	0166	CONC,PAVMT	0	100	7	10	70.00	UT	1.50	1.50	100	1999	1999	3	100	105	
3	0020	BARN,FR	0	100	0	0	1.00	UT	0.00	0.00	100	2012	2012	3	100	200	

LAND DESCRIPTION

TOTAL OB/XF 1,105

LN	USE CODE	CLS	LAND USE DESCRIPTION	CAP	RD	LOC ZONE	FRONT	DEPTH	TOT LND UTS	UNIT TYPE	DT	DPTH FACT	% COND	TOT ADJ	UNIT PRICE	ADJ UNIT PRICE	LAND VALUE	OTHER ADJUSTMENTS AND NOTES	YEAR	DENSITY	DECL	FRZ	YR	CONSRV
1	0100	C	SFR	100		A-1	0.00	0.00	1.00	AC		1.00	1.00	1.00	4,500.00	4,500.00	4,500							
2	5500	A	TIMBER 2	0		A-1	0.00	0.00	4.50	AC		1.00	1.00	1.00	445.00	445.00	2,002							
3	5910	A	SWAMP/CYPRES	0		A-1	0.00	0.00	1.45	AC		1.00	1.00	1.00	40.00	40.00	58							
4	5997	A	RIVERS/BAYS/	0		A-1	0.00	0.00	2.00	AC		1.00	1.00	1.00	25.00	25.00	50							
5	9600	C	WASTELAND	0		A-1	0.00	0.00	1.32	AC		1.00	1.00	1.00	25.00	25.00	33							
6	9910	M	MKT.VAL.AG	0		A-1	0.00	0.00	9.27	AC		1.00	1.00	0.50	9,000.00	4,500.00	41,715							

REVIEW DATE 07/20/2023 BY HC Total Acres: 10.27 Total Land Value: 6,643 Market: 41,715 Agricultural: 2,110 Common: 4,533 PRINTED 11/21/2025 BY SYS