BEG SE COR OF NE1/4, RUN N 526.4
W 331 FT, S 526.41 FT, E 331 FT

ANDERSON TONY D
1245 SW TROY ST
LAKE CITY, FL 32024

2026

09-4S-16-02818-001

COLUMBIA COUNTY PROPERTY

BUILDING CHARACTERISTICS

ELEMENT	CD	CONSTRUCTION
Exterior Wall	19	COMMON BRK 100
Roof Structur	08	IRREGULAR 100
Roof Cover	03	COMP SHNGL 100
Interior Wall	05	DRYWALL 100
Interior Floo	14	CARPET 100
Air Condition	03	CENTRAL 100
Heating Type	04	AIR DUCTED 100
Bedrooms		3 100
Bathrooms		2.5 100
Frame	01	NONE 100
Stories	1.	1. 100
Architectual	05	CONV 100
Units		0 100
Condition Adj	03	03 100
Kitchen Adjus	01	01 100
Quality	09	09
DOR CODE	0100	SINGLE FAMILY
MAP NUM		MKT AREA 06
NEIGHBORHOOD/LOC	9416.00	1.00/

AREA TYPE	TOTAL GROSS AREA	PCT OF BASE	YEAR	TOT ADJ AREA	SUBAREA MARKET VALUE
APT	400	100		400	41,888
BAS	504	100		504	52,779
BAS	2,401	100		2,401	251,435
FOP	114	30		34	3,560
FOP	152	30		46	4,817
PTO	285	5		14	1,466
UCP	400	20		80	8,378
UGR	400	45		180	18,850
UOP	272	20		54	5,655
UOP	400	20		80	8,378
TOTALS	5,328			3,793	397,207

MARKET ADJUSTMENTS

TYPE	MDL	EFF. AREA	TOT ADJ PTS	EFF. BASE RATE	REPL. COST NEW	AYB	EYB	ECON	FNCT		NORM	% COND
0100	01	3,793	139.5550	156.30	592,846	1992	1992	0	0	0	33.00	67.00

1 SINGLE FAM 100% - 2007 Heated Area: 3305 HX Base Yr 2007

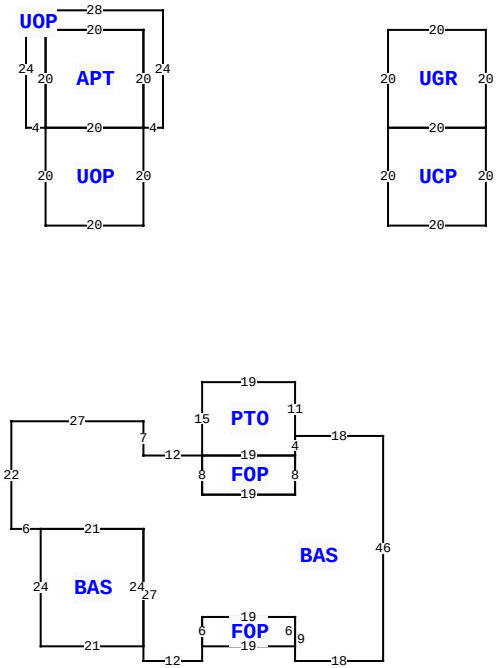

1245 SW TROY ST, LAKE CITY

BLD DATE		LGL DATE	
XF DATE		LAND DATE	
INC DATE		AG DATE	

VALUATION SUMMARY

VALUATION BY		STANDARD
Tax Group: 3	Tax Dist:	
BUILDING MARKET VALUE		397,207
TOTAL MARKET OB/XF VALUE		19,677
TOTAL LAND VALUE - MARKET		40,000
TOTAL MARKET VALUE		456,884
SOH/AGL Deduction		122,876
ASSESSED VALUE		334,008
TOTAL EXEMPTION VALUE	HX HB	50,722
BASE TAXABLE VALUE		283,286
TOTAL JUST VALUE		456,884
NCON VALUE		0
INCOME VALUE		
PREVIOUS YEAR MKT VALUE		462,812

SALE:5:1: 4 ACRES

SALE:4:1: 4 ACRES (PAID TOO MUCH)

SALE:3:1: BAILEY ORIGINALLY SOLD LAND & BOUGHT BAC

SALE:2:1: (SON)

PERMIT NUM	DESCRIPTION	AMT	ISSUED
25595	GARAGE	125	03/07/2007

SALES DATA

OFF RECORD Number	DATE	TYPE INST	Q U	V I	RSN CD	SALE PRICE
1091/1786	8/02/2006	WD	Q	I		320,000
GRANTOR:WILLIAM & DORCAS SIMM						
GRANTEE:TONY D ANDERSON						
0765/0742	9/23/1992	WD	Q	I		88,800
GRANTOR:TRENTON BAILEY						
GRANTEE:WILLIAM L SIMMONS						

BUILDING NOTES

BUILDING DIMENSIONS

BAS= W27 S22 E6 BAS= S24 E21N24 W21$ E21 S27 E12 N3 FOP= E19 N6 W19 S6$ N6 E19 S9 E18 N46 W18 PTO= N11 W19 S15 E19N4$ S4 FOP= W19 S8 E19 N8$ S8 W19 N8 W12 N7$ PTR= N40 UOP= N20 UOP= E4 N24 W28 S24 E4 N20 E20 S20$ APT= N20 W20 S20 E20$ W20 S20 E20$ S40$ PTR= N40 E50 UCP= E20 N20 UGR= N20 W20 S20 E20$ W20 S20$ S40 W50$.

EXTRA FEATURES

LN	OB/XF CODE	DESCRIPTION	BLD	CAP	L	W	UNITS	UT	Adj R	ADJ UNIT PRICE	ORIG COND	YEAR ON	YEAR ACTUAL	Q	% COND	OB/XF MKT VALUE	NOTES
1	0190	FPLC PF	0	100	0	0	1.00	UT	1,200.00	1,200.00	100	0	0	3	100	1,200	
2	0166	CONC,PAVMT	0	100	0	0	5,259.00	UT	3.00	3.00	100	2007	2007	3	100	15,777	
3	0031	BARN,MT AE	0	100	0	0	1.00	UT	0.00	0.00	100	2014	2014	3	100	2,100	
4	0252	LEAN-TO W/	0	100	0	0	1.00	UT	0.00	0.00	100	2014	2014	3	100	100	
5	0070	CARPORT UF	0	100	0	0	1.00	UT	0.00	0.00	100	2019	2019	3	100	500	

LAND DESCRIPTION

TOTAL OB/XF 19,677

LN	USE CODE	CLS	LAND USE DESCRIPTION	CAP	RD	LOC ZONE	FRONT	DEPTH	TOT LND UTS	UNIT TYPE	DT	DPTH FACT	% COND	TOT ADJ	UNIT PRICE	ADJ UNIT PRICE	LAND VALUE	OTHER ADJUSTMENTS AND NOTES	YEAR	DENSITY	DECL	FRZ	YR	CONSRV
1	0100	C	SFR	100		A-1	0.00	0.00	4.00	AC		1.00	1.00	1.00	10,000.00	10,000.00	40,000							

REVIEW DATE 01/25/2024 BY KS Total Acres: 4.00 Total Land Value: 40,000 Market: 0 Agricultural: 0 Common: 40,000 PRINTED 10/01/2025 BY SYS