LOT 6 TUSTENUGGEE HILLS S/D.
730-038, 856-1418, 1420, 867-918

CONTRERAS RUBEN E/CONTRERAS PAOLA A
599 SW NEWTON CIR
FORT WHITE, FL 32038

2026

08-6S-17-09626-106

COLUMBIA COUNTY PROPERTY

BUILDING CHARACTERISTICS

ELEMENT	CD	CONSTRUCTION
Exterior Wall	31	VINYL SID 100
Roof Structur	08	IRREGULAR 100
Roof Cover	03	COMP SHNGL 100
Interior Wall	05	DRYWALL 100
Interior Floo	08	SHT VINYL 100
Air Condition	03	CENTRAL 100
Heating Type	04	AIR DUCTED 100
Bedrooms		4 100
Bathrooms		2 100
Frame	02	WOOD FRAME 100
Stories	1.	1. 100
Architectual	05	CONV 100
Units		0 100
Condition Adj	03	03 100
Kitchen Adjus	01	01 100
Quality	05	05

DOR CODE 0100 SINGLE FAMILY
MAP NUM | MKT AREA 02
NEIGHBORHOOD/LOC 8617.0100 1.00/

AREA TYPE	TOTAL GROSS AREA	PCT OF BASE	YEAR	TOT ADJ AREA	SUBAREA MARKET VALUE
BAS	56	100		56	4,518
BAS	144	100		144	11,617
BAS	1,676	100		1,676	135,211
FGR	644	55		354	28,559
FOP	96	30		29	2,339
FUS	253	100		253	20,411
UOP	252	20		50	4,034
TOTALS	3,121			2,562	206,689

MARKET ADJUSTMENTS

TYPE	MDL	EFF. AREA	TOT ADJ PTS	EFF. BASE RATE	REPL. COST NEW	AYB	EYB	ECON	FNCT		NORM	% COND
0100	01	2,562	102.9000	115.25	295,270	2001	2001	0	0	0	30.00	70.00

1 SINGLE FAM 100% - 2003 Heated Area: 2129 HX Base Yr 2003

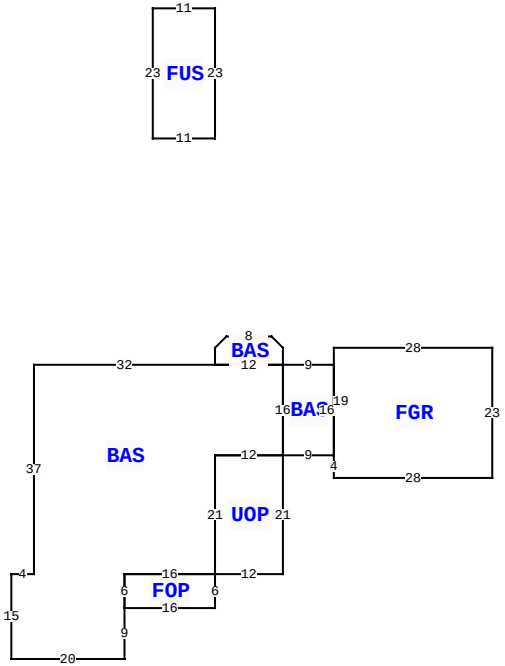

599 SW NEWTON CIR, FORT WHITE

BLD DATE		LGL DATE	
XF DATE		LAND DATE	05/20/2024 MLU
INC DATE		AG DATE	

VALUATION SUMMARY

VALUATION BY		STANDARD
Tax Group: 3	Tax Dist:	
BUILDING MARKET VALUE		206,689
TOTAL MARKET OB/XF VALUE		2,884
TOTAL LAND VALUE - MARKET		40,200
TOTAL MARKET VALUE		249,773
SOH/AGL Deduction		78,095
ASSESSED VALUE		171,678
TOTAL EXEMPTION VALUE	HX HB	50,722
BASE TAXABLE VALUE		120,956
TOTAL JUST VALUE		249,773
NCON VALUE		0
INCOME VALUE		
PREVIOUS YEAR MKT VALUE		253,464

SALE:2:1: LOT 6, SALE NOT IN LINE
SALE:3:1: LOT 6 (TERMINATION OF AGREEMENT)
SALE:1:1: LOT 6

PERMIT NUM	DESCRIPTION	AMT	ISSUED
23972	ADDN SFR	206	12/16/2005
17791	SFR	297	01/03/2001

SALES DATA

OFF RECORD Number	DATE	TYPE INST	Q U	V I	RSN CD	SALE PRICE
0893/2826	12/21/1999	WD	Q	V		12,000
GRANTOR: J L DICKS						
GRANTEE: CONTRERAS						
0884/1378	7/13/1999	QC	Q	V	01	13,051
GRANTOR: S TOWNSEND						
GRANTEE: J L DICKS						

BUILDING NOTES

BUILDING DIMENSIONS

BAS= W32 S37 W4 S15 E20 N9 FOP= E16 N6 W16 S6$ N6 E16 UOP= E12 N21 W12 S21$ N21 E12 BAS= E9 FGR= S4 E28 N23 W28 S19$ N16 W9 S16$ N16 BAS= N3 L2 U2 W8 D2 L2 S3 E12$ W12$ PTR= N40 FUS= N23 W11 S23 E11$ S40$.

EXTRA FEATURES

LN	OB/XF CODE	DESCRIPTION	BLD	CAP	L	W	UNITS	UT	Adj R	ADJ UNIT PRICE	ORIG COND	YEAR ON	YEAR ACTUAL	Q	% COND	OB/XF MKT VALUE	NOTES
1	0294	SHED WOOD/	0	100	14	16	224.00	UT	3.50	3.50	100	2001	2001	3	100	784	
2	0166	CONC,PAVMT	0	100	0	0	1.00	UT	0.00	0.00	100	2013	2013	3	100	1,200	
3	0080	DECKING	0	100	0	0	1.00	UT	0.00	0.00	100	2013	2013	3	100	900	

LAND DESCRIPTION

TOTAL OB/XF 2,884

LN	USE CODE	CLS	LAND USE DESCRIPTION	CAP	RD	LOC ZONE	FRONT	DEPTH	TOT LND UTS	UNIT TYPE	DT	DPTH FACT	% COND	TOT ADJ	UNIT PRICE	ADJ UNIT PRICE	LAND VALUE	OTHER ADJUSTMENTS AND NOTES	YEAR	DENSITY	DECL	FRZ	YR	CONSRV
1	0100	C	SFR	100		00	0.00	0.00	4.02	AC		1.00	1.00	1.00	10,000.00	10,000.00	40,200							

REVIEW DATE 10/05/2017 BY DF Total Acres: 4.02 Total Land Value: 40,200 Market: 0 Agricultural: 0 Common: 40,200 PRINTED 11/04/2025 BY SYS