LOTS 3 & 4 BLOCK 19 LAKESIDE HEI
AS: COMM NW COR OF SW1/4 OF NW1/
TO W LINE OF PONCE DE LEON ST, S

PROCTOR PATRICIA ALBURY/ALBURY ESTON III
136 SW PONCE DE LEON AVE
LAKE CITY, FL 32025

2025

08-4S-17-08298-000

COLUMBIA COUNTY PROPERTY

BUILDING CHARACTERISTICS

ELEMENT	CD	CONSTRUCTION
Exterior Wall	15	CONC BLOCK 80
Exterior Wall	21	STONE 20
Roof Structur	04	WOOD TRUSS 100
Roof Cover	12	MODULAR MT 100
Interior Wall	05	DRYWALL 100
Interior Floo	13	LAM/VNLPLK 100
Air Condition	03	CENTRAL 100
Heating Type	04	AIR DUCTED 100
Bedrooms		3 100
Bathrooms		2 100
Frame	01	NONE 100
Stories	1.	1. 100
Architectual	05	CONV 100
Units		0 100
Condition Adj	03	03 100
Kitchen Adjus	01	01 100
Quality	05	05
DOR CODE	0100	SINGLE FAMILY
MAP NUM		MKT AREA 06
NEIGHBORHOOD/LOC	8417.0300	1.00/

AREA TYPE	TOTAL GROSS AREA	PCT OF BASE	YEAR	TOT ADJ AREA	SUBAREA MARKET VALUE
BAS	1,828	100		1,828	206,203
FCP	180	25		45	5,076
FOP	50	30		15	1,692
FOP	84	30		25	2,821
UST	80	45		36	4,061
TOTALS	2,222			1,949	219,852

MARKET ADJUSTMENTS

TYPE	MDL	EFF. AREA	TOT ADJ PTS	EFF. BASE RATE	REPL. COST NEW	AYB	EYB	ECON	FNCT		NORM	% COND
0100	01	1,949	112.9080	126.46	246,471	1954	2015	0	0	0	10.80	89.20

1 SINGLE FAM – 100% - 2023 Heated Area: 1828 HX Base Yr 2023

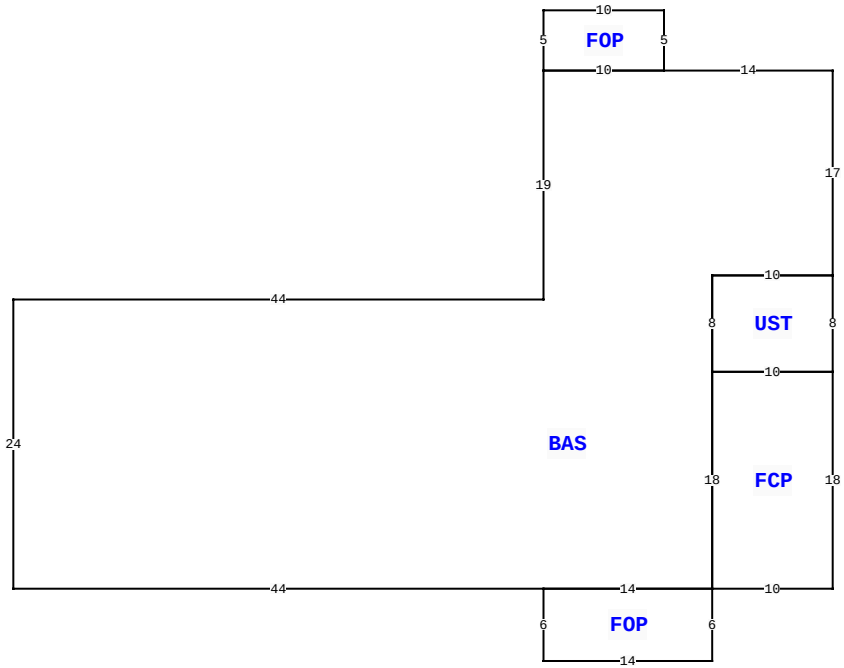

136 SW PONCE DE LEON AVE, LAKE CITY

BLD DATE	11/19/1998 DC	LGL DATE	
XF DATE		LAND DATE	04/21/2023 MLU
INC DATE		AG DATE	

VALUATION SUMMARY

VALUATION BY		STANDARD
Tax Group: 2	Tax Dist:	
BUILDING MARKET VALUE		219,852
TOTAL MARKET OB/XF VALUE		2,604
TOTAL LAND VALUE - MARKET		25,900
TOTAL MARKET VALUE		248,356
SOH/AGL Deduction		79,667
ASSESSED VALUE		168,689
TOTAL EXEMPTION VALUE	HX HB WX	55,722
BASE TAXABLE VALUE		112,967
TOTAL JUST VALUE		248,356
NCON VALUE		0
INCOME VALUE		
PREVIOUS YEAR MKT VALUE		237,377

PERMIT NUM	DESCRIPTION	AMT	ISSUED
000052460	Generator	0	02/28/2025
000045735	Electrical Servic	0	10/21/2022
000043683	Electrical Servic	0	02/09/2022
27830	MAINT/ALTR	35	05/22/2009

SALES DATA

OFF RECORD Number	DATE	TYPE INST	Q U	V I	RSN CD	SALE PRICE
1508/1034	2/12/2024	WD	U	I	11	100
GRANTOR: PROCTOR PATRICIA ALBU						
GRANTEE: PROCTOR PATRICIA AL						
1468/1063	6/06/2022	WD	Q	I	01	276,000
GRANTOR: KENU PROPERTIES LLC						
GRANTEE: ALBURY PATRICIA A						

BUILDING NOTES

BUILDING DIMENSIONS

BAS= W14 FOP= N5 W10 S5 E10$W10 S19 W44 S24 E44 FOP= S6 E14 N6 W14$ E14 FCP= E10 N18W10 S18$ N18 UST= E10 N8 W10 S8$ N8 E10 N17$.

EXTRA FEATURES

LN	OB/XF CODE	DESCRIPTION	BLD	CAP	L	W	UNITS	UT	Adj R	ADJ UNIT PRICE	ORIG COND	YEAR ON	YEAR ACTUAL	Q	% COND	OB/XF MKT VALUE	NOTES
1	0011	BARN,BLK A	0	100	12	19	228.00	UT	7.30	7.30	100	0	0	3	100	1,664	
2	0166	CONC,PAVMT	0	100	0	0	1.00	UT	0.00	0.00	100	0	0	3	100	300	
3	0120	CLFENCE 4	0	100	0	0	1.00	UT	0.00	0.00	100	1994	1994	3	100	400	
4	0296	SHED METAL	0	100	6	8	48.00	UT	5.00	5.00	100	1994	1994	3	100	240	

LAND DESCRIPTION

TOTAL OB/XF 2,604

LN	USE CODE	CLS	LAND USE DESCRIPTION	CAP	RD	LOC ZONE	FRONT	DEPTH	TOT LND UTS	UNIT TYPE	DT	DPTH FACT	% COND	TOT ADJ	UNIT PRICE	ADJ UNIT PRICE	LAND VALUE	OTHER ADJUSTMENTS AND NOTES	YEAR	DENSITY	DECL	FRZ	YR	CONSRV
1	0100	C	SFR	100		00	0.00	0.00	2.00	LT		1.00	1.00	0.70	18,500.00	12,950.00	25,900							

REVIEW DATE 10/24/2022 BY JB Total Acres: 0.26 Total Land Value: 25,900 Market: 0 Agricultural: 0 Common: 25,900 PRINTED 06/24/2025 BY SYS