E1/2 OF LOT 14 & ALL LOT 15 BLOC
HEIGHTS S/D & ALSO THAT PART OF
CONTIGUOUS TO THE ABOVE DESC'D L

KANTOR SHARON L
189 SW BALBOA PL
LAKE CITY, FL 32025

2026

08-4S-17-08237-000

COLUMBIA COUNTY PROPERTY

BUILDING CHARACTERISTICS

ELEMENT	CD	CONSTRUCTION
Exterior Wall	17	MSNRY STUC 70
Exterior Wall	05	AVERAGE 30
Roof Structur	03	GABLE/HIP 100
Roof Cover	03	COMP SHNGL 100
Interior Wall	03	PLASTER 80
Interior Wall	04	PLYWOOD 20
Interior Floo	12	HARDWOOD 80
Interior Floo	14	CARPET 20
Air Condition	03	CENTRAL 100
Heating Type	04	AIR DUCTED 100
Bedrooms		2 100
Bathrooms		2 100
Frame	01	NONE 100
Stories	1.	1. 100
Architectual	05	CONV 100
Units		0 100
Condition Adj	03	03 100
Kitchen Adjus	01	01 100
Quality	04	04

DOR CODE 0100 SINGLE FAMILY

MAP NUM | MKT AREA 06

NEIGHBORHOOD/LOC 8417.0300 1.00/

AREA TYPE	TOTAL GROSS AREA	PCT OF BASE	YEAR	TOT ADJ AREA	SUBAREA MARKET VALUE
BAS	338	100		338	27,139
BAS	1,028	100		1,028	82,543
FCP	246	25		62	4,978
FSP	132	40		53	4,256
UEP	210	60		126	10,117
UST	88	45		40	3,212
TOTALS	2,042			1,647	132,245

MARKET ADJUSTMENTS

TYPE	MDL	EFF. AREA	TOT ADJ PTS	EFF. BASE RATE	REPL. COST NEW	AYB	EYB	ECON	FNCT		NORM	% COND
0100	01	1,647	110.2950	123.53	203,454	1925	1925	0	0	0	35.00	65.00

1 SINGLE FAM 0% - 2024 Heated Area: 1366 HX Base Yr

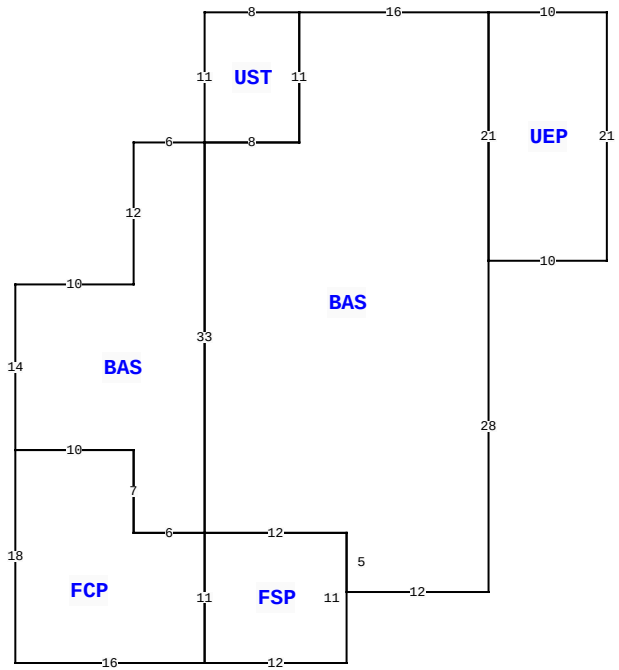

189 SW BALBOA PL, LAKE CITY

BLD DATE		LGL DATE	
XF DATE		LAND DATE	04/21/2023 MLU
INC DATE		AG DATE	

VALUATION SUMMARY

VALUATION BY	STANDARD
Tax Group: 2	Tax Dist:
BUILDING MARKET VALUE	132,245
TOTAL MARKET OB/XF VALUE	2,143
TOTAL LAND VALUE - MARKET	27,750
TOTAL MARKET VALUE	162,138
SOH/AGL Deduction	0
ASSESSED VALUE	162,138
TOTAL EXEMPTION VALUE	0
BASE TAXABLE VALUE	162,138
TOTAL JUST VALUE	162,138
NCON VALUE	0
INCOME VALUE	
PREVIOUS YEAR MKT VALUE	162,138

PERMIT NUM	DESCRIPTION	AMT	ISSUED
6973	ADDN SFR	7,000	03/25/1993

SALES DATA

OFF RECORD Number	DATE	TYPE INST	Q U /	V I /	RSN CD	SALE PRICE
1297/2461	7/10/2015	PR	U	I	19	47,000
GRANTOR: KRISTIN A NELSON AS P						
GRANTEE: SHARON L KANTOR & S						
0772/1077	3/15/1993	WD	Q	I		33,000
GRANTOR: KENNETH ANDERSON						
GRANTEE: CHARLES PITRAT						

BUILDING NOTES

BUILDING DIMENSIONS

BAS= W16 UST= W8 S11 E8 N11$S11W8 BAS= W6 S12 W10 S14 E10S7 E6 N33$ S33 FCP= W6 N7 W10S18 E16 N11$ FSP= S11 E12 N11W12$ E12 S5 E12 N28 UEP= E10N21 W10 S21$ N21$.

EXTRA FEATURES

LN	OB/XF CODE	DESCRIPTION	BLD	CAP	L	W	UNITS	UT	Adj R	ADJ UNIT PRICE	ORIG COND	YEAR ON	YEAR ACTUAL	Q	% COND	OB/XF MKT VALUE	NOTES
1	0166	CONC,PAVMT	0	0	0	0	1.00	UT	0.00	0.00	100	0	0	3	100	100	
2	0296	SHED METAL	0	0	10	18	1.00	UT	0.00	0.00	100	0	0	3	100	300	
3	0166	CONC,PAVMT	0	0	0	0	162.00	UT	1.50	1.50	100	1994	1994	3	100	243	
4	0081	DECKING WI	0	0	0	0	1.00	UT	0.00	0.00	100	2012	2012	3	100	200	
5	0190	FPLC PF	0	0	0	0	1.00	UT	1,200.00	1,200.00	100	2012	2012	3	100	1,200	
6	0081	DECKING WI	0	0	0	0	1.00	UT	0.00	0.00	100	2012	2012	3	100	100	

LAND DESCRIPTION

TOTAL OB/XF 2,143

LN	USE CODE	CLS	LAND USE DESCRIPTION	CAP	RD	LOC ZONE	FRONT	DEPTH	TOT LND UTS	UNIT TYPE	DT	DPTH FACT	% COND	TOT ADJ	UNIT PRICE	ADJ UNIT PRICE	LAND VALUE	OTHER ADJUSTMENTS AND NOTES	YEAR	DENSITY	DECL	FRZ	YR	CONSRV
1	0100	C	SFR	0		00	0.00	0.00	1.50	LT		1.00	1.00	1.00	18,500.00	18,500.00	27,750							

REVIEW DATE 04/03/2017 BY DF Total Acres: 0.31 Total Land Value: 27,750 Market: 0 Agricultural: 0 Common: 27,750 PRINTED 11/18/2025 BY SYS