LOT 11 HICKORY HILLS ESTATES.
681-392, 737-755, 779-1404, WD 1

FOREMAN DONALD G/FOREMAN SHERRI M
230 SE BUTLER GLEN
LAKE CITY', FL 32025

2026

08-4S-17-08186-005

COLUMBIA COUNTY PROPERTY

BUILDING CHARACTERISTICS

ELEMENT	CD	CONSTRUCTION
Exterior Wall	16	WD FR STUC 80
Exterior Wall	17	MSNRY STUC 20
Roof Structur	03	GABLE/HIP 100
Roof Cover	03	COMP SHNGL 100
Interior Wall	05	DRYWALL 100
Interior Floo	14	CARPET 70
Interior Floo	15	HARDTILE 30
Air Condition	03	CENTRAL 100
Heating Type	04	AIR DUCTED 100
Bedrooms		3 100
Bathrooms		3 100
Frame	01	NONE 100
Stories	1.	1. 100
Architectual	05	CONV 100
Units		0 100
Condition Adj	03	03 100
Kitchen Adjus	01	01 100
Quality	08	08
DOR CODE	0100	SINGLE FAMILY
MAP NUM		MKT AREA 06
NEIGHBORHOOD/LOC	8417.0100	1.00/

AREA TYPE	TOTAL GROSS AREA	PCT OF BASE	YEAR	TOT ADJ AREA	SUBAREA MARKET VALUE
BAS	3,843	100		3,843	347,465
FBM	1,691	80		1,353	122,331
FGR	810	55		446	40,325
FOP	184	30		55	4,973
FOP	575	30		172	15,551
TOTALS	7,103			5,869	530,646

MARKET ADJUSTMENTS

TYPE	MDL	EFF. AREA	TOT ADJ PTS	EFF. BASE RATE	REPL. COST NEW	AYB	EYB	ECON	FNCT		NORM	% COND
0100	01	5,869	124.1988	139.10	816,378	1992	1992	0	0	0	35.00	65.00

1 SINGLE FAM 100% - 2021 Heated Area: 5534 HX Base Yr 2021

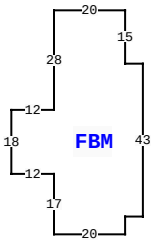

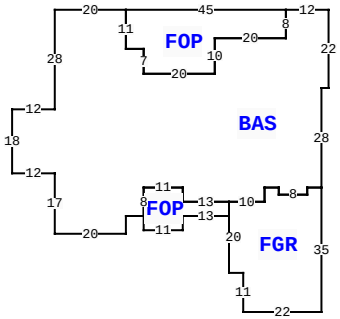

230 SE BUTLER GLN, LAKE CITY

BLD DATE		LGL DATE	
XF DATE		LAND DATE	04/03/2025 MLU
INC DATE		AG DATE	

VALUATION SUMMARY

VALUATION BY		STANDARD
Tax Group: 1	Tax Dist:	
BUILDING MARKET VALUE		530,646
TOTAL MARKET OB/XF VALUE		9,020
TOTAL LAND VALUE - MARKET		35,000
TOTAL MARKET VALUE		574,666
SOH/AGL Deduction		263,941
ASSESSED VALUE		310,725
TOTAL EXEMPTION VALUE	HX HB	50,722
BASE TAXABLE VALUE		260,003
TOTAL JUST VALUE		574,666
NCON VALUE		0
INCOME VALUE		
PREVIOUS YEAR MKT VALUE		574,666

PERMIT NUM	DESCRIPTION	AMT	ISSUED

SALES DATA

OFF RECORD Number	DATE	TYPE INST	Q U	V I	RSN CD	SALE PRICE
1273/1196	4/25/2014	WD	U	I	11	100
GRANTOR: DONALD G & SHERRI M F						
GRANTEE: DONALD G & SHERRI M						
0779/1404	9/03/1993	WD	Q	I	03	0
GRANTOR: TANYA FOREMAN						
GRANTEE: DONALD FOREMAN						

BUILDING NOTES

BUILDING DIMENSIONS

BAS= W20 S28 W12 S18 E12 S17 E20 N5 E5 FOP= S4 E11 N4 E13N4 W13 N4 W11 S8$ N8 E11 S4 E13 FGR= S20 E4 S11 E22 N35 W4 S2 W8 N2 W4 S4 W10$ E10 N4 E4 S2 E8 N2 E4 N28 E2 N22 W12 FOP= W45 S11 E5 S7 E20 N10 E20 N8$ S8 W20 S10 W20 N7 W5 N11$ PTR=N40 FBM= N43 W5 N15 W20 S28 W12 S18 E12 S17 E20 N5E5 $ S40$.

EXTRA FEATURES

LN	OB/XF CODE	DESCRIPTION	BLD	CAP	L	W	UNITS	UT	Adj R	ADJ UNIT PRICE	ORIG COND	YEAR ON	YEAR ACTUAL	Q	% COND	OB/XF MKT VALUE	NOTES
1	0180	FPLC 1STRY	0	100	0	0	1.00	UT	2,000.00	2,000.00	100	0	0	3	100	2,000	
2	0260	PAVEMENT-A	0	100	80	30	2,400.00	UT	0.90	0.90	100	0	0	3	100	2,160	
3	0260	PAVEMENT-A	0	100	300	18	5,400.00	UT	0.90	0.90	100	0	0	3	100	4,860	

LAND DESCRIPTION

TOTAL OB/XF 9,020

LN	USE CODE	CLS	LAND USE DESCRIPTION	CAP	RD	LOC ZONE	FRONT	DEPTH	TOT LND UTS	UNIT TYPE	DT	DPTH FACT	% COND	TOT ADJ	UNIT PRICE	ADJ UNIT PRICE	LAND VALUE	OTHER ADJUSTMENTS AND NOTES	YEAR	DENSITY	DECL	FRZ	YR	CONSRV
1	0100	C	SFR	100		*RSF-1	0.00	0.00	1.00	LT		1.00	1.00	1.00	35,000.00	35,000.00	35,000							

REVIEW DATE 04/05/2017 BY DF Total Acres: 0.92 Total Land Value: 35,000 Market: 0 Agricultural: 0 Common: 35,000 PRINTED 11/07/2025 BY SYS