LOT 18 HILLS OF HUNTSVILLE.

WD 1138-2317, CT 1172-1931,

THE PENA FAMILY REVOCABLE TRUST/
804 NW MILO TER
LAKE CITY, FL 32055

2026

08-3S-16-02032-118

BUILDING CHARACTERISTICS

ELEMENT	CD	CONSTRUCTION
Exterior Wall	32	HARDIE BRD 100
Roof Structur	08	IRREGULAR 100
Roof Cover	03	COMP SHNGL 100
Interior Wall	05	DRYWALL 100
Interior Floo	12	HARDWOOD 80
Interior Floo	15	HARDTILE 20
Air Condition	03	CENTRAL 100
Heating Type	04	AIR DUCTED 100
Bedrooms		3 100
Bathrooms		2 100
Frame	02	WOOD FRAME 100
Stories	1.	1. 100
Architectual	05	CONV 100
Units		0 100
Quality	07	07

DOR CODE 0100 SINGLE FAMILY

MAP NUM | MKT AREA 01

NEIGHBORHOOD/LOC 8316.0100 1.00/

AREA TYPE	TOTAL GROSS AREA	PCT OF BASE	YEAR	TOT ADJ AREA	SUBAREA MARKET VALUE
BAS	2,302	100		2,302	297,259
FGR	518	55		285	36,802
FOP	166	30		50	6,457
FSP	387	40		155	20,015
TOTALS	3,373			2,792	360,532

MARKET ADJUSTMENTS

TYPE	MDL	EFF. AREA	TOT ADJ PTS	EFF. BASE RATE	REPL. COST NEW	AYB	EYB	ECON	FNCT		NORM	% COND
0100	01	2,792	123.9700	138.85	387,669	2018	2018	0	0	0	7.00	93.00

1 SINGLE FAM 100% - 2020 Heated Area: 2302 HX Base Yr 2020

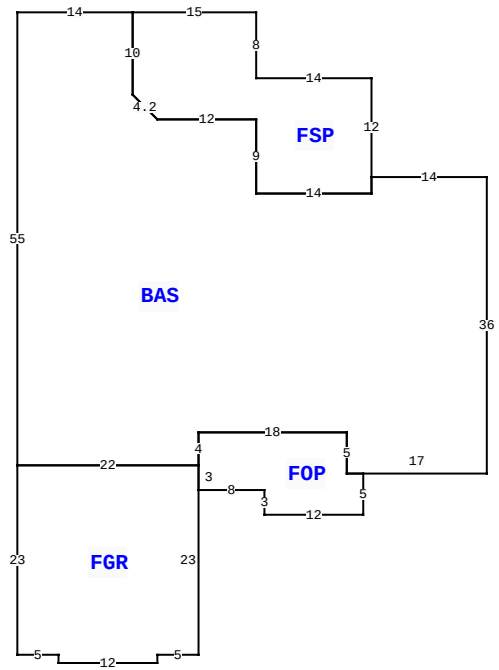

804 NW MILO TER, LAKE CITY

BLD DATE		LGL DATE	
XF DATE		LAND DATE	04/07/2025 MLU
INC DATE		AG DATE	

COLUMBIA COUNTY PROPERTY

PAGE 1 of 1 3

VALUATION SUMMARY

VALUATION BY		STANDARD
Tax Group: 3	Tax Dist:	
BUILDING MARKET VALUE		360,532
TOTAL MARKET OB/XF VALUE		45,057
TOTAL LAND VALUE - MARKET		55,000
TOTAL MARKET VALUE		460,589
SOH/AGL Deduction		219,377
ASSESSED VALUE		241,212
TOTAL EXEMPTION VALUE	HX HB	50,722
BASE TAXABLE VALUE		190,490
TOTAL JUST VALUE		460,589
NCON VALUE		0
INCOME VALUE		
PREVIOUS YEAR MKT VALUE		465,761

PERMIT NUM	DESCRIPTION	AMT	ISSUED
38825	POOL ENCL	0	10/29/2019
36162	SFR	1,183	01/08/2018

SALES DATA

OFF RECORD Number	DATE	TYPE INST	Q U	V I	RSN CD	SALE PRICE
1367/0240	8/15/2018	QC	U	V	11	100

GRANTOR: ROBERTO L PENA & JOSE

GRANTEE: ROBERTO L PENA TRUS

1185/0791	11/18/2009	WD	Q	V	01	59,900

GRANTOR: WESTRIDGE INC

GRANTEE: ROBERTO L PENA & JO

BUILDING NOTES

BUILDING DIMENSIONS

BAS= W14 FSP= N12 W14 N8 W15 S10 D3 R3 E12 S9 E14 N2$ S2 W14 N9 W12 L3 U3 N10 W14 S55 FGR= S23 E5 S1 E12 N1 E5 N23 W22$ E22 FOP= S3 E8 S3 E12 N5 W2 N5 W18 S4$ N4 E18 S5 E17 N36$.

EXTRA FEATURES

LN	OB/XF CODE	DESCRIPTION	BLD	CAP	L	W	UNITS	UT	Adj R	ADJ UNIT PRICE	ORIG COND	YEAR ON	YEAR ACTUAL	Q	% COND	OB/XF MKT VALUE	NOTES
1	0166	CONC,PAVMT	0	100	0	0	2,965.00	UT	2.25	2.25	100	2018	2018	3	100	6,671	
2	0280	POOL R/CON	0	100	0	0	312.00	UT	70.00	70.00	100	2020	2020	3	91	19,874	
3	0282	POOL ENCL	0	100	0	0	1,144.00	UT	15.00	15.00	100	2020	2020	3	70	12,012	
4	0030	BARN,MT	0	100	0	0	1.00	UT	6,000.00	6,000.00	100	2023	2022		100	6,000	
5	0169	FENCE/WOOD	0	100	0	0	1.00	UT	500.00	500.00	100	2023	2022		100	500	

LAND DESCRIPTION

TOTAL OB/XF 45,057

LN	USE CODE	CLS	LAND USE DESCRIPTION	CAP	RD	LOC ZONE	FRONT	DEPTH	TOT LND UTS	UNIT TYPE	DT	DPTH FACT	% COND	TOT ADJ	UNIT PRICE	ADJ UNIT PRICE	LAND VALUE	OTHER ADJUSTMENTS AND NOTES	YEAR	DENSITY	DECL	FRZ	YR	CONSRV
1	0100	C	SFR	100		A-1	0.00	0.00	1.00	LT		1.00	1.00	1.00	55,000.00	55,000.00	55,000							

REVIEW DATE 04/04/2023 BY KS Total Acres: 5.01 Total Land Value: 55,000 Market: 0 Agricultural: 0 Common: 55,000 PRINTED 11/18/2025 BY SYS