W1/2 OF SW1/4 OF NE1/4 EX RD R/W
BRECKENRIDGE LN.

KC ADVENTURES, INC
245 SW BRECKENRIDGE LN
FORT WHITE, FL 32038

2026

07-6S-16-03789-004

COLUMBIA COUNTY PROPERTY

BUILDING CHARACTERISTICS

ELEMENT	CD	CONSTRUCTION
Exterior Wall	05	AVERAGE 100
Roof Structur	08	IRREGULAR 100
Roof Cover	03	COMP SHNGL 100
Interior Wall	05	DRYWALL 100
Interior Floo	12	HARDWOOD 70
Interior Floo	03	CONC FINSH 30
Air Condition	03	CENTRAL 100
Heating Type	04	AIR DUCTED 100
Bedrooms		2 100
Bathrooms		2 100
Frame	01	NONE 100
Stories	2.	2. 100
Architectual	05	CONV 100
Units		0 100
Condition Adj	03	03 100
Kitchen Adjus	01	01 100
Quality	05	05
DOR CODE	0100	SINGLE FAMILY
MAP NUM		MKT AREA 02
NEIGHBORHOOD/LOC	7616.00	1.00/

AREA TYPE	TOTAL GROSS AREA	PCT OF BASE	YEAR	TOT ADJ AREA	SUBAREA MARKET VALUE
FOP	250	30		75	6,158
FSP	840	40		336	27,588
FST	80	55		44	3,613
FST	560	55	2025	308	25,289
HXB	1,210	100		1,210	99,351
HXP	250	30		75	6,158
HXP	520	30		156	12,809
HXU	320	55		176	14,451
SFB	1,522	80		1,218	100,008
UCP	440	20		88	7,226
TOTALS	6,096			3,733	306,510

MARKET ADJUSTMENTS

TYPE	MDL	EFF. AREA	TOT ADJ PTS	EFF. BASE RATE	REPL. COST NEW	AYB	EYB	ECON	FNCT		NORM	% COND
0100	01	3,733	106.6370	119.43	445,832	1977	2000	0	0	0	31.25	68.75

1 SINGLE FAM 0% - 2024 Heated Area: 2732 HX Base Yr

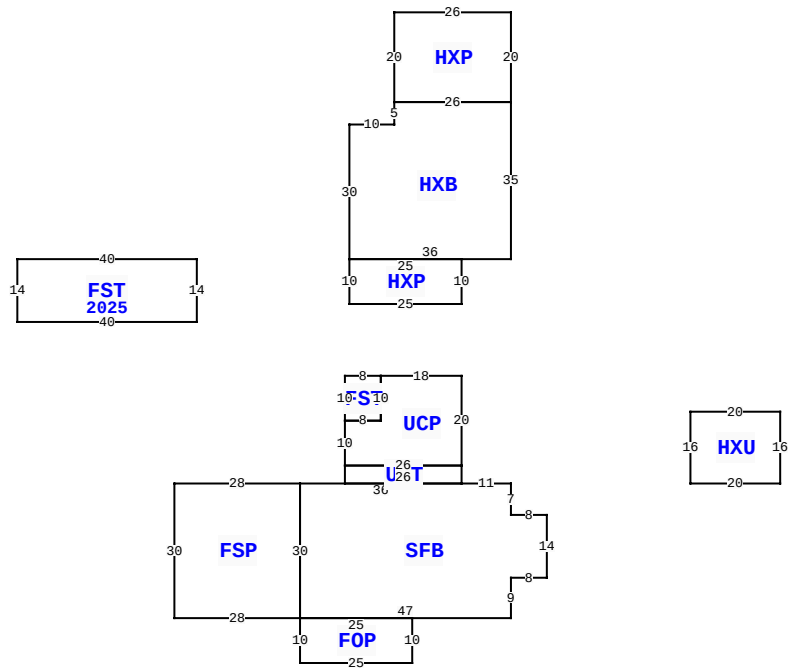

** This building has 11 Sub-Areas

245 SW BRECKENRIDGE LN, FORT WHITE

BLD DATE		LGL DATE	
XF DATE		LAND DATE	04/08/2025 MLU
INC DATE		AG DATE	

VALUATION SUMMARY

VALUATION BY	STANDARD
Tax Group: 3	Tax Dist:
BUILDING MARKET VALUE	306,510
TOTAL MARKET OB/XF VALUE	88,686
TOTAL LAND VALUE - MARKET	120,000
TOTAL MARKET VALUE	515,196
SOH/AGL Deduction	0
ASSESSED VALUE	515,196
TOTAL EXEMPTION VALUE	0
BASE TAXABLE VALUE	515,196
TOTAL JUST VALUE	515,196
NCON VALUE	0
INCOME VALUE	
PREVIOUS YEAR MKT VALUE	520,768

PERMIT NUM	DESCRIPTION	AMT	ISSUED
000053713	Electrical Servic		07/30/2025
000047657	Storage Building	45,000	07/13/2023
000047560	Electrical Servic	0	06/28/2023

SALES DATA

OFF RECORD Number	DATE	TYPE INST	Q U	V I	RSN CD	SALE PRICE
1493/144	6/07/2023	WD	U	I	35	900,000
GRANTOR: HAYES JUNE E						
GRANTEE: KC ADVENTURES, INC						
0481/0411	12/01/1981	WD	Q	I		165,000
GRANTOR:						
GRANTEE:						

BUILDING NOTES

BUILDING DIMENSIONS

SFB=[ORIG=0,0] W11 W36 S30 E47 N9 E8 N14 W8 N7 $
HXB=[ORIG=0,-50] N35 W26 S5 W10 S30 E36 $
FSP=[ORIG=-47,0] W28 S30 E28 N30 $
HXP=[ORIG=0,-85] N20 W26 S20 E26 $
UCP=[ORIG=-11,-4] N20 W18 S10 W8 S10 E26 $
HXU=[ORIG=40,0] E20 N16 W20 S16 $
FOP=[ORIG=-47,30] S10 E25 N10 W25 $
HXP=[ORIG=-36,-50] S10 E25 N10 W25 $
UST=[ORIG=-11,0] N4 W26 S4 E26 $
FST=[ORIG=-29,-24] W8 S10 E8 N10 $
PTR=[ORIG=0,0] N50 S50 $
PTR=[ORIG=0,0] E40 W40 $

EXTRA FEATURES

LN	OB/XF CODE	DESCRIPTION	BLD	CAP	L	W	UNITS	UT	Adj R	ADJ UNIT PRICE	ORIG COND	YEAR ON	YEAR ACTUAL	Q	% COND	OB/XF MKT VALUE	NOTES
1	0190	FPLC PF	0	0	0	0	1.00	UT	1,200.00	1,200.00	100	0	0	3	100	1,200	
2	0040	BARN,POLE	0	0	12	48	1.00	UT	0.00	0.00	100	0	0	3	100	691	
3	0296	SHED METAL	0	0	16	24	1.00	UT	0.00	0.00	100	0	0	3	100	748	
4	9915	RV SITE	0	0	0	0	13.00	UT	3,000.00	3,000.00	100	0	0	3	100	39,000	
5	0166	CONC,PAVMT	0	0	44	54	2,376.00	UT	0.53	0.53	100	1995	1995	3	100	1,247	
6	0294	SHED WOOD/	0	0	0	0	1.00	UT	35,000.00	35,000.00	100	2024	2023		100	35,000	
7	0080	DECKING	0	0	0	0	1.00	UT	800.00	800.00	100	2025	2024		100	800	
8	9910	RV SITE/RE	0	0	0	0	5.00	UT	2,000.00	2,000.00	100	2025	2024		100	10,000	

LAND DESCRIPTION

TOTAL OB/XF 88,686

LN	USE CODE	CLS	LAND USE DESCRIPTION	CAP	RD	LOC ZONE	FRONT	DEPTH	TOT LND UTS	UNIT TYPE	DT	DPTH FACT	% COND	TOT ADJ	UNIT PRICE	ADJ UNIT PRICE	LAND VALUE	OTHER ADJUSTMENTS AND NOTES	YEAR	DENSITY	DECL	FRZ	YR	CONSRV
1	0100	C	SFR	0		A-1	0.00	0.00	1.00	AC		1.00	1.00	1.00	6,000.00	6,000.00	6,000							
2	9900	C	AC NON-AG	0		A-1	0.00	0.00	14.00	AC		1.00	1.00	1.00	6,000.00	6,000.00	84,000							
3	3600	C	RV PARKS/CAM	0		A-1	0.00	0.00	5.00	AC		1.00	1.00	1.00	6,000.00	6,000.00	30,000							

REVIEW DATE 08/06/2025 BY mark Total Acres: 20.00 Total Land Value: 120,000 Market: 0 Agricultural: 0 Common: 120,000 PRINTED 11/19/2025 BY SYS