A PRCL IN SEC 7 & 18 DESC AS:
COMM NE COR OF SEC 18, RUN W 131
117.79 FT, W 686.53 FT, W 1273.1

SPARKS MICHAEL ANTHONY/MUSANTE TONI ANN
1628 SW MANDIBA DR
LAKE CITY, FL 32024

2026

07-5S-17-09157-001

COLUMBIA COUNTY PROPERTY

BUILDING CHARACTERISTICS

ELEMENT	CD	CONSTRUCTION
Exterior Wall	32	HARDIE BRD 100
Roof Structur	08	IRREGULAR 100
Roof Cover	14	PREFIN MT 100
Interior Wall	05	DRYWALL 100
Interior Floo	12	HARDWOOD 80
Interior Floo	15	HARDTILE 20
Air Condition	03	CENTRAL 100
Heating Type	04	AIR DUCTED 100
Bedrooms		4 100
Bathrooms		5 100
Frame	02	WOOD FRAME 100
Stories	2.	2. 100
Architectual	05	CONV 100
Units		0 100
Kitchen Adjus	04	04 100
Quality	07	07
DOR CODE	5000	IMPROVED AG
MAP NUM		MKT AREA 02
NEIGHBORHOOD/LOC	7517.00	1.00/

AREA TYPE	TOTAL GROSS AREA	PCT OF BASE	YEAR	TOT ADJ AREA	SUBAREA MARKET VALUE
BAS	6,183	100		6,183	1,023,793
FCP	480	25		120	19,870
FGR	1,303	55		717	118,723
FOP	360	30		108	17,883
FOP	392	30		118	19,539
FOP	468	30		140	23,181
FOP	468	30		140	23,181
FOP	973	30		292	48,350
FUS	3,404	100		3,404	563,641
SFB	112	80		90	14,902
TOTALS	15,593			11,809	1,955,358

MARKET ADJUSTMENTS

TYPE	MDL	EFF. AREA	TOT ADJ PTS	EFF. BASE RATE	REPL. COST NEW	AYB	EYB	ECON	FNCT		NORM	% COND
0900	01	11,809	153.3199	183.98	2,172,620	2015	2015	0	0	0	10.00	90.00

1 EXCEPT SFR 0% - 2023 Heated Area: 9699 HX Base Yr

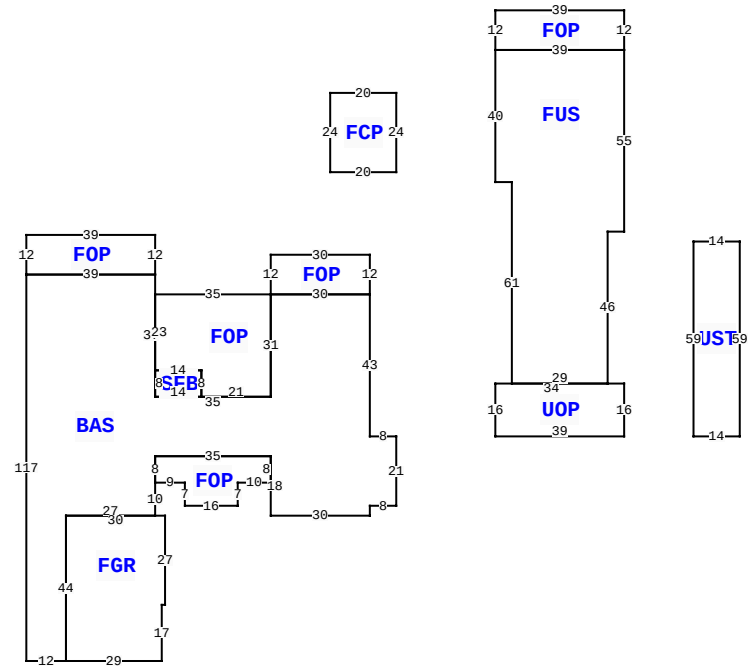

** This building has 12 Sub-Areas

1628 SW MANDIBA DR, LAKE CITY

BLD DATE		LGL DATE	
XF DATE		LAND DATE	
INC DATE		AG DATE	

VALUATION SUMMARY

VALUATION BY	STANDARD
Tax Group: 3	Tax Dist:
BUILDING MARKET VALUE	1,955,358
TOTAL MARKET OB/XF VALUE	483,463
TOTAL LAND VALUE - MARKET	1,203,800
TOTAL MARKET VALUE	2,569,727
SOH/AGL Deduction	0
ASSESSED VALUE	2,569,727
TOTAL EXEMPTION VALUE	0
BASE TAXABLE VALUE	2,569,727
TOTAL JUST VALUE	3,642,621
NCON VALUE	0
INCOME VALUE	
PREVIOUS YEAR MKT VALUE	3,667,216

PERMIT NUM	DESCRIPTION	AMT	ISSUED
000052085	Generator	0	01/16/2025
000052084	Generator	0	01/16/2025
000049880	Electrical Servic	0	05/20/2024
36326	STORAGE	231	02/14/2018
32983	POOL	280	05/14/2015
32639	SFR	3,636	01/22/2015

SALES DATA

OFF RECORD Number	DATE	TYPE INST	Q / U	V / I	RSN CD	SALE PRICE
1457/1601	1/24/2022	WD	U	I	43	3,400,000
GRANTOR: LINTON MICAH & LEAH						
GRANTEE: SPARKS MICHAEL ANTH						
1457/1599	1/24/2022	WD	U	I	43	850,000
GRANTOR: LINTON FARM & CATTLE,						
GRANTEE: SPARKS MICHAEL ANTH						

BUILDING NOTES

BUILDING DIMENSIONS

BAS= W8 N43 FOP= N12 W30 S12 E30$ W30 FOP= W35 S23 SFB= S8 E14 N8 W14$ E14 S8 E21 N31$ S31 W35 N37 FOP= N12 W39 S12 E39$ W39 S117 E12 FGR= E29 N17 E1 N27 W30 S44 $ N44 E27 N10 FOP= E9 S7 E16 N7 E10 N8 W35 S8$ N8 E35 S18 E30 N3 E8 N21$ PTR= N80 FCP= N24 W20 S24 E20$ S80$ PTR= E30 UOP= E39 N16 W5 FUS= N46 E5 N55 FOP= N12 W39 S12 E39$ W39 S40 E5 S61 E29$ W34 S16$ W30$ PTR= E90 UST= E14 N59 W14 S59$ W90$.

EXTRA FEATURES

LN	OB/XF CODE	DESCRIPTION	BLD	CAP	L	W	UNITS	UT	Adj R	ADJ UNIT PRICE	ORIG COND	YEAR ON	YEAR ACTUAL	Q	% COND	OB/XF MKT VALUE	NOTES
1	0280	POOL R/CON	0	0	0	0	1,012.00	UT	94.50	94.50	100	2015	2015	3	79	75,551	
2	0030	BARN,MT	0	0	0	0	8,200.00	UT	33.50	33.50	100	2022	2021		100	274,700	
3	0260	PAVEMENT-A	0	0	26	1287	25,740.00	UT	1.30	1.30	100	2015	2015	3	100	33,462	
4	0169	FENCE/WOOD	0	0	0	0	1,725.00	UT	18.00	18.00	100	2015	2015	3	100	31,050	
5	0166	CONC,PAVMT	0	0	0	0	9,400.00	UT	2.00	2.00	100	2015	2015	3	100	18,800	
6	0166	CONC,PAVMT	0	0	0	0	4,725.00	UT	4.00	4.00	100	2015	2015	3	100	18,900	
7	0180	FPLC 1STRY	0	0	0	0	3.00	UT	2,000.00	2,000.00	100	2015	2015	3	100	6,000	
8	0300	TENNIS CRT	0	0	0	0	1.00	UT	0.00	0.00	100	2015	2015	3	100	25,000	

LAND DESCRIPTION

TOTAL OB/XF 483,463

LN	USE CODE	CLS	LAND USE DESCRIPTION	CAP	RD	LOC ZONE	FRONT	DEPTH	TOT LND UTS	UNIT TYPE	DT	DPTH FACT	% COND	TOT ADJ	UNIT PRICE	ADJ UNIT PRICE	LAND VALUE	OTHER ADJUSTMENTS AND NOTES	YEAR	DENSITY	DECL	FRZ	YR	CONSRV
1	0100	C	SFR	0		A-1	0.00	0.00	10.00	AC		1.00	1.00	1.00	10,000.00	10,000.00	100,000							
2	6200	A	PASTURE 3	0		A-1	0.00	0.00	110.38	AC		1.00	1.00	1.00	280.00	280.00	30,906							
3	9910	M	MKT.VAL.AG	0		A-1	0.00	0.00	110.38	AC		1.00	1.00	1.00	10,000.00	10,000.00	1,103,800							

REVIEW DATE 01/28/2022 BY CP Total Acres: 120.38 Total Land Value: 130,906 Market: 1,103,800 Agricultural: 30,906 Common: 100,000 PRINTED 10/03/2025 BY SYS