COMM NE COR OF SEC, RUN S
79.95 FT TO S R/W MCFARLANE
AVE, RUN E 325 FT TO W R/W

1ST CLASS HOLDINGS LLC
290 EMPORIA GLENN
LAKE CITY, FL 32055

2026

07-4S-17-08127-007

COLUMBIA COUNTY PROPERTY

BUILDING CHARACTERISTICS

ELEMENT	CD	CONSTRUCTION
Exterior Wall	25	MOD METAL 80
Exterior Wall	19	COMMON BRK 20
Roof Structur	10	STEEL FRME 100
Roof Cover	12	MODULAR MT 100
Interior Wall	05	DRYWALL 100
Interior Floo	14	CARPET 80
Interior Floo	15	HARDTILE 20
Ceiling	02	F.NOT SUS 100
Air Condition	06	ENG CENTRL 100
Heating Type	09	ENG F AIR 100
Plumbing		4 100
Frame	05	STEEL 100
Story Height		18 100
RMS		10 100
Stories	1.	1. 100
Units		0 100
Condition Adj	03	03 100
Quality	06	06
DOR CODE	1100	STORES/1 STORY
MAP NUM		MKT AREA 06
NEIGHBORHOOD/LOC	7417.00	1.00/

AREA TYPE	TOTAL GROSS AREA	PCT OF BASE	YEAR	TOT ADJ AREA	SUBAREA MARKET VALUE
BAS	448	100		448	15,819
BAS	880	100		880	31,073
BAS	1,760	100		1,760	62,146
CAN	84	30		25	883
FST	1,298	70		909	32,097
SDA	1,260	185		2,331	82,307
SPA	2,160	100		2,160	76,270
TOTALS	7,890			8,513	300,594

MARKET ADJUSTMENTS

TYPE	MDL	EFF. AREA	TOT ADJ PTS	EFF. BASE RATE	REPL. COST NEW	AYB	EYB	ECON	FNCT		NORM	% COND
8700	06	8,513	154.8724	58.85	500,990	1988	1988	0	0	0	40.00	60.00

1 PREF M B A 0% - 0 Heated Area: 6508 HX Base Yr

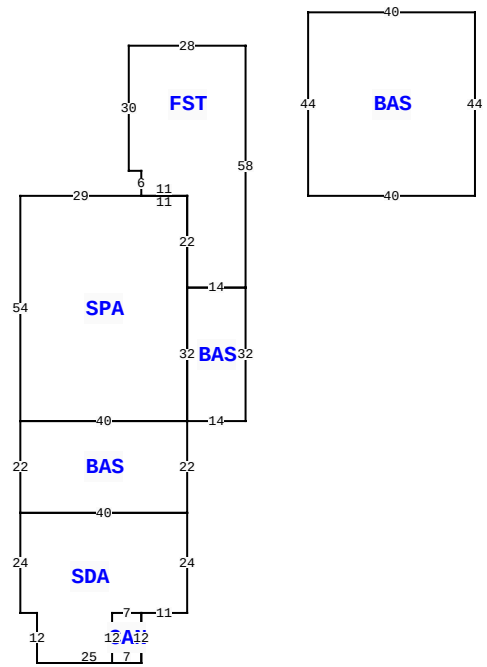

2140 SW MAIN BLVD, LAKE CITY

BLD DATE		LGL DATE	
XF DATE		LAND DATE	
INC DATE		AG DATE	

VALUATION SUMMARY

VALUATION BY	STANDARD
Tax Group: 2	Tax Dist:
BUILDING MARKET VALUE	300,594
TOTAL MARKET OB/XF VALUE	12,130
TOTAL LAND VALUE - MARKET	56,250
TOTAL MARKET VALUE	368,974
SOH/AGL Deduction	0
ASSESSED VALUE	368,974
TOTAL EXEMPTION VALUE	0
BASE TAXABLE VALUE	368,974
TOTAL JUST VALUE	368,974
NCON VALUE	0
INCOME VALUE	
PREVIOUS YEAR MKT VALUE	368,974

PERMIT NUM	DESCRIPTION	AMT	ISSUED

SALES DATA

OFF RECORD Number	DATE	TYPE INST	Q U /	V I /	RSN CD	SALE PRICE
1317/2351	6/30/2016	WD	Q	I	01	360,000
GRANTOR: CADY SCHOLASTIC SERVI						
GRANTEE: 1ST CLASS HOLDINGS						
1086/0636	6/08/2006	WD	Q	I	04	210,000
GRANTOR: WAYNE T HUDSON						
GRANTEE: CADY SCHOLASTIC SER						

BUILDING NOTES

BUILDING DIMENSIONS

SPA= W29 S54 BAS= S22 SDA= S24 E4 S12 E25 CAN= W7 N12 E7S12$ N12 E11 N24 W40$ E40 N22 W40$ E40 BAS= E14 N32 W14 S32$ N32 FST= E14 N58 W28 S30 E3 S6 E11 S22$ N22 W11$ PTR= E40 BAS= E40 N44 W40 S44$ W40$.

EXTRA FEATURES

LN	OB/XF CODE	DESCRIPTION	BLD	CAP	L	W	UNITS	UT	Adj R	ADJ UNIT PRICE	ORIG COND	YEAR ON	YEAR ACTUAL	Q	% COND	OB/XF MKT VALUE	NOTES
1	0166	CONC,PAVMT	0	0	0	0	1.00	UT	0.00	0.00	100	0	0	3	100	4,700	
2	0260	PAVEMENT-A	0	0	0	0	7,430.00	UT	1.00	1.00	100	0	0	3	100	7,430	

LAND DESCRIPTION

TOTAL OB/XF 12,130

LN	USE CODE	CLS	LAND USE DESCRIPTION	CAP	RD	LOC ZONE	FRONT	DEPTH	TOT LND UTS	UNIT TYPE	DT	DPTH FACT	% COND	TOT ADJ	UNIT PRICE	ADJ UNIT PRICE	LAND VALUE	OTHER ADJUSTMENTS AND NOTES	YEAR	DENSITY	DECL	FRZ	YR	CONSRV
1	1100	C	STORE 1FLR	0		CI	75.00	300.00	22,500.00	SF		1.00	1.00	1.00	2.50	2.50	56,250							

REVIEW DATE 03/30/2017 BY DF Total Acres: 0.52 Total Land Value: 56,250 Market: 0 Agricultural: 0 Common: 56,250 PRINTED 11/17/2025 BY SYS