BEG 372.54 FT S OF NW COR OF SW1
RUN E 807.60 FT TO W LINE OF SR-
R/W 208.25 FT, W 759.73 FT TO W

BBL MANAGEMENT SERVICES INC
P O 3823
LAKE CITY, FL 32056

2025

07-4S-17-08119-000

COLUMBIA COUNTY PROPERTY

BUILDING CHARACTERISTICS

ELEMENT	CD	CONSTRUCTION
Exterior Wall	19	COMMON BRK 100
Roof Structur	03	GABLE/HIP 100
Roof Cover	14	PREFIN MT 100
Interior Wall	04	PLYWOOD 80
Interior Wall	05	DRYWALL 20
Interior Floo	14	CARPET 90
Interior Floo	08	SHT VINYL 10
Air Condition	03	CENTRAL 100
Heating Type	04	AIR DUCTED 100
Bedrooms		3 100
Bathrooms		2.5 100
Frame	01	NONE 100
Stories	1.	1. 100
Architectual	05	CONV 100
Units		0 100
Condition Adj	03	03 100
Kitchen Adjus	01	01 100
Quality	05	05
DOR CODE	1700	OFFICE BLD 1STY
MAP NUM		MKT AREA 06
NEIGHBORHOOD/LOC	7417.00	1.00/

AREA TYPE	TOTAL GROSS AREA	PCT OF BASE	YEAR	TOT ADJ AREA	SUBAREA MARKET VALUE
BAS	64	100		64	5,525
BAS	2,279	100		2,279	196,738
FCP	420	25		105	9,064
FOP	78	30		23	1,986
FST	24	55		13	1,123
UDU	120	55		66	5,697
TOTALS	2,985			2,550	220,133

MARKET ADJUSTMENTS

TYPE	MDL	EFF. AREA	TOT ADJ PTS	EFF. BASE RATE	REPL. COST NEW	AYB	EYB	ECON	FNCT		NORM	% COND
0100	01	2,550	118.5800	132.81	338,666	1972	1972	0	0	0	35.00	65.00

1 SINGLE FAM – 0% - 0 Heated Area: 2343 HX Base Yr

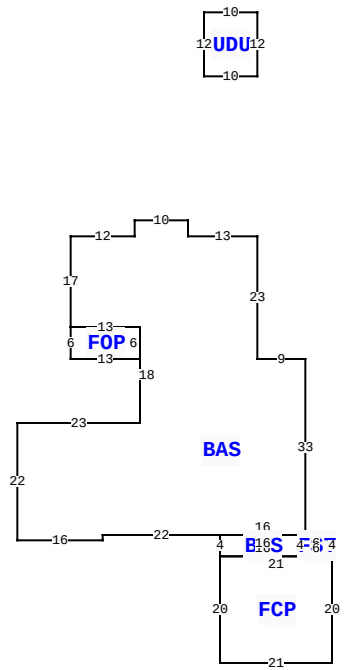

1450 SW STATE ROAD 47 , LAKE CITY

BLD DATE		LGL DATE	
XF DATE		LAND DATE	
INC DATE		AG DATE	

VALUATION SUMMARY

VALUATION BY	STANDARD
Tax Group: 2	Tax Dist:
BUILDING MARKET VALUE	706,847
TOTAL MARKET OB/XF VALUE	30,433
TOTAL LAND VALUE - MARKET	56,885
TOTAL MARKET VALUE	794,165
SOH/AGL Deduction	0
ASSESSED VALUE	794,165
TOTAL EXEMPTION VALUE	0
BASE TAXABLE VALUE	794,165
TOTAL JUST VALUE	794,165
NCON VALUE	0
INCOME VALUE	
PREVIOUS YEAR MKT VALUE	772,204

PERMIT NUM	DESCRIPTION	AMT	ISSUED
34318	COMMERCIAL	2,578	08/03/2016

SALES DATA

OFF RECORD Number	DATE	TYPE INST	Q U	V I	RSN CD	SALE PRICE
1304/1783	11/17/2015	WD	Q	I	01	149,500
GRANTOR: MOHAMMED & SHAGUFTA C						
GRANTEE: BBL MANAGEMENT SERV						
0921/0512	2/23/2001	WD	Q	I		150,000
GRANTOR: DOYLE & BETTY V MARKH						
GRANTEE: MOHAMMED & SHAGUFTA						

BUILDING NOTES

BUILDING DIMENSIONS

BAS= W13 N3 W10 S3 W12 S17 FOP= S6 E13 N6 W13$ E13 S18 W23 S22E16 N1 E22 BAS= S4 FCP= S20 E21 N20 FST= N4 W6 S4 E6$ W21$ E16 N4 W16$ E16 N33 W9 N23$ PTR=N30UDU= N12 W10 S12 E10$ S30$.

EXTRA FEATURES

LN	OB/XF CODE	DESCRIPTION	BLD	CAP	L	W	UNITS	UT	Adj R	ADJ UNIT PRICE	ORIG COND	YEAR ON	YEAR ACTUAL	Q	% COND	OB/XF MKT VALUE	NOTES
1	0190	FPLC PF	0	0	0	0	1.00	UT	1,200.00	1,200.00	100	0	0	3	100	1,200	
2	0166	CONC,PAVMT	0	0	0	0	1,170.00	UT	2.25	2.25	100	2017	2017	3	100	2,633	
3	0260	PAVEMENT-A	0	0	0	0	16,000.00	UT	1.60	1.60	100	2017	2017	3	100	25,600	
4	0169	FENCE/WOOD	0	0	0	0	1.00	UT	0.00	0.00	100	2017	2017	3	100	1,000	

LAND DESCRIPTION

TOTAL OB/XF 30,433

LN	USE CODE	CLS	LAND USE DESCRIPTION	CAP	RD	LOC ZONE	FRONT	DEPTH	TOT LND UTS	UNIT TYPE	DT	DPTH FACT	% COND	TOT ADJ	UNIT PRICE	ADJ UNIT PRICE	LAND VALUE	OTHER ADJUSTMENTS AND NOTES	YEAR	DENSITY	DECL	FRZ	YR	CONSRV
1	1700	C	1STORY OFF	0		CI	0.00	0.00	3.67	AC		1.00	1.00	1.00	15,500.00	15,500.00	56,885							

REVIEW DATE 11/14/2017 BY CP Total Acres: 3.67 Total Land Value: 56,885 Market: 0 Agricultural: 0 Common: 56,885 PRINTED 06/23/2025 BY SYS

BEG 372.54 FT S OF NW COR OF SW1
RUN E 807.60 FT TO W LINE OF SR-
R/W 208.25 FT, W 759.73 FT TO W

BBL MANAGEMENT SERVICES INC
P O 3823
LAKE CITY, FL 32056

2025

07-4S-17-08119-000

COLUMBIA COUNTY PROPERTY

BUILDING CHARACTERISTICS

ELEMENT	CD	CONSTRUCTION
Exterior Wall	32	HARDIE BRD 80
Exterior Wall	21	STONE 20
Roof Structur	08	IRREGULAR 100
Roof Cover	14	PREFIN MT 100
Interior Wall	05	DRYWALL 100
Interior Floo	12	HARDWOOD 50
Interior Floo	14	CARPET 50
Ceiling	01	FIN.SUSPD 100
Air Condition	07	ENG PACKGE 100
Heating Type	09	ENG F AIR 100
Fixtures		11 100
Frame	02	WOOD FRAME 100
Story Height		10 100
RMS		23 100
Stories	1.	1. 100
Units		0 100
Condition Adj	03	03 100
Quality	07	07
DOR CODE	1700	OFFICE BLD 1STY
MAP NUM		MKT AREA 06
NEIGHBORHOOD/LOC	7417.00	1.00/

AREA TYPE	TOTAL GROSS AREA	PCT OF BASE	YEAR	TOT ADJ AREA	SUBAREA MARKET VALUE
BAS	5,268	100		5,268	480,241
CAN	32	30		10	912
CAN	202	30		61	5,561
TOTALS	5,502			5,339	486,714

MARKET ADJUSTMENTS

TYPE	MDL	EFF. AREA	TOT ADJ PTS	EFF. BASE RATE	REPL. COST NEW	AYB	EYB	ECON	FNCT		NORM	% COND
4900	04	5,339	129.6706	95.96	512,330	2017	2017	0	0	0	5.00	95.00

2 OFFICE LOW – 0% - 0 Heated Area: 5268 HX Base Yr

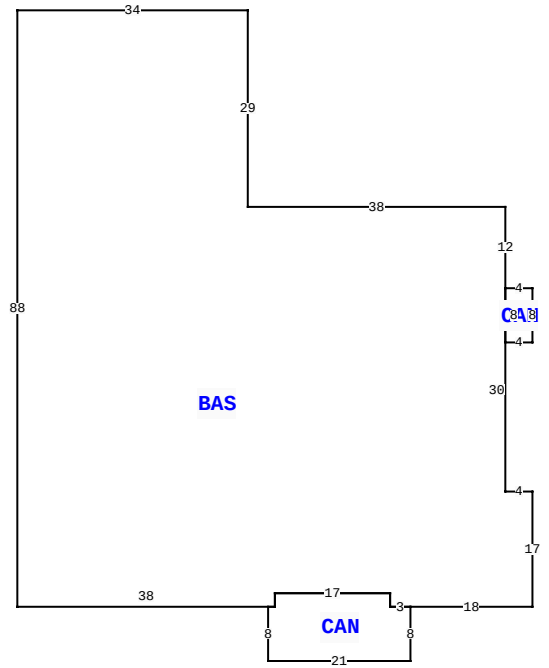

1450 SW STATE ROAD 47 , LAKE CITY

BLD DATE		LGL DATE	
XF DATE		LAND DATE	
INC DATE		AG DATE	

VALUATION SUMMARY

VALUATION BY	STANDARD
Tax Group: 2	Tax Dist:
BUILDING MARKET VALUE	706,847
TOTAL MARKET OB/XF VALUE	30,433
TOTAL LAND VALUE - MARKET	56,885
TOTAL MARKET VALUE	794,165
SOH/AGL Deduction	0
ASSESSED VALUE	794,165
TOTAL EXEMPTION VALUE	0
BASE TAXABLE VALUE	794,165
TOTAL JUST VALUE	794,165
NCON VALUE	0
INCOME VALUE	
PREVIOUS YEAR MKT VALUE	772,204

PERMIT NUM	DESCRIPTION	AMT	ISSUED

SALES DATA

OFF RECORD Number	DATE	TYPE INST	Q / U	V / I	RSN CD	SALE PRICE
1304/1783	11/17/2015	WD	Q	I	01	149,500
GRANTOR: MOHAMMED & SHAGUFTA C						
GRANTEE: BBL MANAGEMENT SERV						
0921/0512	2/23/2001	WD	Q	I		150,000
GRANTOR: DOYLE & BETTY V MARKH						
GRANTEE: MOHAMMED & SHAGUFTA						

BUILDING NOTES

BUILDING DIMENSIONS

BAS= W38 N29 W34 S88 E38 N2 E17 S2 E3 CAN= S8 W21 N8 E1 N2 E17 S2 E3$ E18 N17 W4 N30 CAN= E4 S8 W4 N8$ N12$.

EXTRA FEATURES

LN	OB/XF CODE	DESCRIPTION	BLD	CAP	L	W	UNITS	UT	Adj R	ADJ UNIT PRICE	ORIG COND	YEAR ON	YEAR ACTUAL	Q	% COND	OB/XF MKT VALUE	NOTES

LAND DESCRIPTION

TOTAL OB/XF 0

LN	USE CODE	CLS	LAND USE DESCRIPTION	CAP	RD	LOC ZONE	FRONT	DEPTH	TOT LND UTS	UNIT TYPE	DT	DPTH FACT	% COND	TOT ADJ	UNIT PRICE	ADJ UNIT PRICE	LAND VALUE	OTHER ADJUSTMENTS AND NOTES	YEAR	DENSITY	DECL	FRZ	YR	CONSRV

REVIEW DATE 11/14/2017 BY CP Total Acres: 3.67 Total Land Value: 56,885 Market: 0 Agricultural: 0 Common: 56,885 PRINTED 06/23/2025 BY SYS