LOT 15 HOLLY HILL S/D.
826-313, 896-2598, LE 1129-150,

REDMOND MARTIN F/REDMOND PAULA V
288 SW DEANA TERR
LAKE CITY, FL 32025

2026

07-4S-17-08111-115

COLUMBIA COUNTY PROPERTY

BUILDING CHARACTERISTICS

ELEMENT	CD	CONSTRUCTION
Exterior Wall	31	VINYL SID 70
Exterior Wall	19	COMMON BRK 30
Roof Structur	03	GABLE/HIP 100
Roof Cover	14	PREFIN MT 100
Interior Wall	05	DRYWALL 100
Interior Floo	14	CARPET 80
Interior Floo	15	HARDTILE 20
Air Condition	03	CENTRAL 100
Heating Type	04	AIR DUCTED 100
Bedrooms		3 100
Bathrooms		2 100
Frame	01	NONE 100
Stories	1.	1. 100
Architectual	05	CONV 100
Units		0 100
Condition Adj	03	03 100
Kitchen Adjus	01	01 100
Quality	05	05
DOR CODE	0100	SINGLE FAMILY
MAP NUM		MKT AREA 06
NEIGHBORHOOD/LOC	7417.0700	1.00/

AREA TYPE	TOTAL GROSS AREA	PCT OF BASE	YEAR	TOT ADJ AREA	SUBAREA MARKET VALUE
BAS	2,040	100		2,040	183,002
FOP	144	30		43	3,857
FUS	336	100		336	30,142
UEP	262	60		157	14,084
UGR	550	45		248	22,247
TOTALS	3,332			2,824	253,333

MARKET ADJUSTMENTS

TYPE	MDL	EFF. AREA	TOT ADJ PTS	EFF. BASE RATE	REPL. COST NEW	AYB	EYB	ECON	FNCT		NORM	% COND
0100	01	2,824	111.5520	124.94	352,831	2001	2001	0	0	0	28.20	71.80

1 SINGLE FAM 100% - 2011 Heated Area: 2376 HX Base Yr 2011

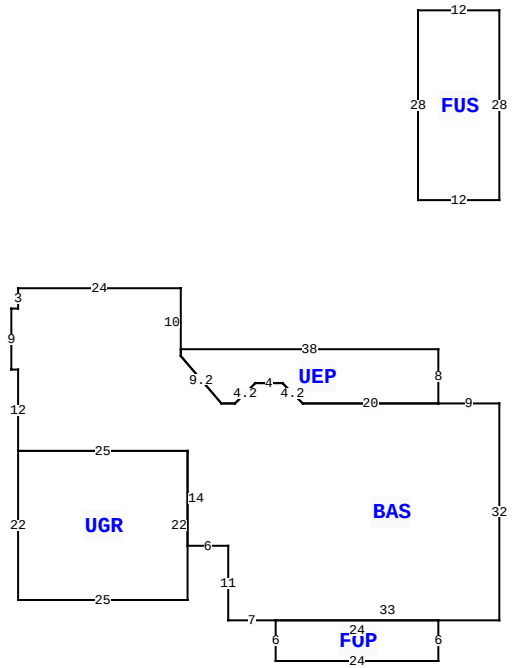

288 SW DEANA TER, LAKE CITY

BLD DATE		LGL DATE	
XF DATE		LAND DATE	04/21/2023 MLU
INC DATE		AG DATE	

VALUATION SUMMARY

VALUATION BY		STANDARD
Tax Group: 2	Tax Dist:	
BUILDING MARKET VALUE		253,333
TOTAL MARKET OB/XF VALUE		4,607
TOTAL LAND VALUE - MARKET		18,500
TOTAL MARKET VALUE		276,440
SOH/AGL Deduction		98,716
ASSESSED VALUE		177,724
TOTAL EXEMPTION VALUE	HX HB	50,722
BASE TAXABLE VALUE		127,002
TOTAL JUST VALUE		276,440
NCON VALUE		0
INCOME VALUE		
PREVIOUS YEAR MKT VALUE		280,568

PERMIT NUM	DESCRIPTION	AMT	ISSUED
17315	SFR	285	10/20/2000

SALES DATA

OFF RECORD Number	DATE	TYPE INST	Q U	V I	RSN CD	SALE PRICE
1201/0609	9/10/2010	WD	Q	I	01	130,000
GRANTOR: CONNIE JO MALONE & UR						
GRANTEE: MARTIN F & PAULA V						
0896/2598	2/14/2000	WD	Q	V		10,500
GRANTOR: BURNETT						
GRANTEE: D WAYT						

BUILDING NOTES

BUILDING DIMENSIONS

BAS= W9 UEP= N8 W38 S1 D7 R6 E2 U3 R3 E4 R3 D3 E20$ W20 U3 L3 W4 L3 D3 W2 L6 U7 N10 W24 S3 W1 S9 E1 S12 UGR= S22 E25 N22 W25$ E25 S14 E6 S11 E7 FOP= S6 E24 N6 W24$ E33 N32$ PTR= N30 FUS= N28 W12 S28 E12$ S30$.

EXTRA FEATURES

LN	OB/XF CODE	DESCRIPTION	BLD	CAP	L	W	UNITS	UT	Adj R	ADJ UNIT PRICE	ORIG COND	YEAR ON	YEAR ACTUAL	Q	% COND	OB/XF MKT VALUE	NOTES
1	0190	FPLC PF	0	100	0	0	1.00	UT	1,200.00	1,200.00	100	2001	2001	3	100	1,200	
2	0120	CLFENCE 4	0	100	36	10	360.00	UT	2.50	2.50	100	2001	2001	3	100	900	
3	0166	CONC,PAVMT	0	100	0	0	1,583.00	UT	1.50	1.50	50	2001	2001	3	50	1,187	
4	0294	SHED WOOD/	0	100	12	16	192.00	UT	7.50	7.50	50	2001	2001	3	50	720	
5	0166	CONC,PAVMT	0	100	0	0	1.00	UT	0.00	0.00	100	2017	2017	3	100	600	

LAND DESCRIPTION

TOTAL OB/XF 4,607

LN	USE CODE	CLS	LAND USE DESCRIPTION	CAP	RD	LOC ZONE	FRONT	DEPTH	TOT LND UTS	UNIT TYPE	DT	DPTH FACT	% COND	TOT ADJ	UNIT PRICE	ADJ UNIT PRICE	LAND VALUE	OTHER ADJUSTMENTS AND NOTES	YEAR	DENSITY	DECL	FRZ	YR	CONSRV
1	0100	C	SFR	100		00	0.00	0.00	1.00	LT		1.00	1.00	1.00	18,500.00	18,500.00	18,500							

REVIEW DATE 03/28/2017 BY BC Total Acres: 0.58 Total Land Value: 18,500 Market: 0 Agricultural: 0 Common: 18,500 PRINTED 11/18/2025 BY SYS