LOT 6 COUNTRY LANDINGS S/D.
820-229, WD 1038-932, WD 1173-84

THE HOUSTON TRUST
223 SW CHALLENGER LN
LAKE CITY, FL 32025

2026

07-4S-17-08106-106

COLUMBIA COUNTY PROPERTY

BUILDING CHARACTERISTICS

ELEMENT	CD	CONSTRUCTION
Exterior Wall	32	HARDIE BRD 100
Roof Structur	08	IRREGULAR 100
Roof Cover	03	COMP SHNGL 100
Interior Wall	05	DRYWALL 100
Interior Floo	12	HARDWOOD 80
Interior Floo	15	HARDTILE 20
Air Condition	03	CENTRAL 100
Heating Type	04	AIR DUCTED 100
Bedrooms		3 100
Bathrooms		2 100
Frame	02	WOOD FRAME 100
Stories	1.	1. 100
Architectual	05	CONV 100
Units		0 100
Quality	07	07

DOR CODE 0100 SINGLE FAMILY
MAP NUM | MKT AREA 06
NEIGHBORHOOD/LOC 7417.0400 1.00/

AREA TYPE	TOTAL GROSS AREA	PCT OF BASE	YEAR	TOT ADJ AREA	SUBAREA MARKET VALUE
BAS	1,974	100		1,974	233,534
BAS	2,279	100		2,279	269,618
FGR	504	55		277	32,771
FOP	210	30		63	7,453
FOP	212	30		64	7,572
TOTALS	5,179			4,657	550,947

MARKET ADJUSTMENTS

TYPE	MDL	EFF. AREA	TOT ADJ PTS	EFF. BASE RATE	REPL. COST NEW	AYB	EYB	ECON	FNCT		NORM	% COND
0100	01	4,657	117.3700	131.45	612,163	2015	2015	0	0	0	10.00	90.00

1 SINGLE FAM 100% - 2016 Heated Area: 4253 HX Base Yr 2016

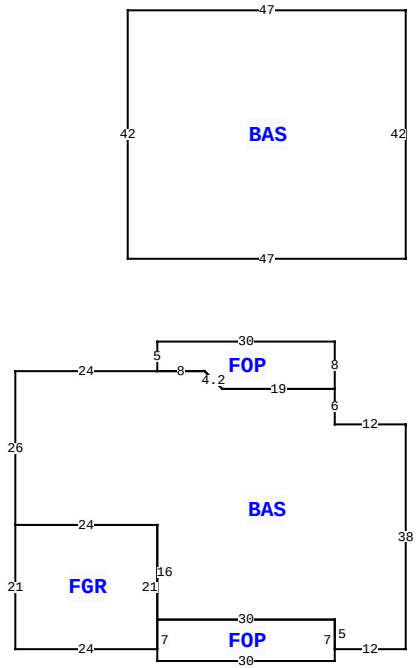

223 SW CHALLENGER LN, LAKE CITY

BLD DATE		LGL DATE	
XF DATE		LAND DATE	04/03/2025 MLU
INC DATE		AG DATE	

VALUATION SUMMARY

VALUATION BY		STANDARD
Tax Group: 2	Tax Dist:	
BUILDING MARKET VALUE		550,947
TOTAL MARKET OB/XF VALUE		5,212
TOTAL LAND VALUE - MARKET		35,000
TOTAL MARKET VALUE		591,159
SOH/AGL Deduction		200,625
ASSESSED VALUE		390,534
TOTAL EXEMPTION VALUE	HX HB SX	100,722
BASE TAXABLE VALUE		289,812
TOTAL JUST VALUE		591,159
NCON VALUE		0
INCOME VALUE		
PREVIOUS YEAR MKT VALUE		597,280

LAND:1:1: 0.50 AC.

PERMIT NUM	DESCRIPTION	AMT	ISSUED
32456	SFR	927	11/06/2014
29124	PLANE HNGR	600	01/11/2011

SALES DATA

OFF RECORD Number	DATE	TYPE INST	Q U /	V I /	RSN CD	SALE PRICE
1173/0841	5/15/2009	WD	Q	V	01	60,000
GRANTOR: WILLIAM T & JILL YOUN						
GRANTEE: THE HOUSTON TRUST						
1038/0932	2/16/2005	WD	Q	V		54,000
GRANTOR: F C CARROLL PROPERTIE						
GRANTEE: WILLIAM T & JILL YO						

BUILDING NOTES

BUILDING DIMENSIONS

BAS= W12 N6 FOP= N8 W30 S5 E8 D3 R3 E19$ W19 L3 U3 W8 W24 S26 FGR= S21 E24 N21 W24$ E24 S16 FOP= S7 E30 N7 W30$ E30 S5 E12 N38$ PTR= N70 BAS= W47 S42 E47 N42$ S70$.

EXTRA FEATURES

LN	OB/XF CODE	DESCRIPTION	BLD	CAP	L	W	UNITS	UT	Adj R	ADJ UNIT PRICE	ORIG COND	YEAR ON	YEAR ACTUAL	Q	% COND	OB/XF MKT VALUE	NOTES
1	0166	CONC,PAVMT	0	100	24	32	768.00	UT	2.00	2.00	100	2011	2011	3	100	1,536	
2	0166	CONC,PAVMT	0	100	0	0	1,838.00	UT	2.00	2.00	100	2015	2015	3	100	3,676	

LAND DESCRIPTION

TOTAL OB/XF 5,212

LN	USE CODE	CLS	LAND USE DESCRIPTION	CAP	RD	LOC ZONE	FRONT	DEPTH	TOT LND UTS	UNIT TYPE	DT	DPTH FACT	% COND	TOT ADJ	UNIT PRICE	ADJ UNIT PRICE	LAND VALUE	OTHER ADJUSTMENTS AND NOTES	YEAR	DENSITY	DECL	FRZ	YR	CONSRV
1	0100	C	SFR	100		RSF-	1113.00	191.00	1.00	LT		1.00	1.00	1.00	35,000.00	35,000.00	35,000							

REVIEW DATE 03/29/2017 BY DF Total Acres: 0.50 Total Land Value: 35,000 Market: 0 Agricultural: 0 Common: 35,000 PRINTED 11/07/2025 BY SYS