COMM SE COR OF SW1/4 OF SE1/4, R
FT FOR POB, CONT W 330.74 FT, N
E 329.10 FT, S 1325.84 FT TO POB

BUCK TRACY M/BUCK LINDA L
715 SW BRIM ST
LAKE CITY, FL 32024

2026

07-4S-16-02807-000

COLUMBIA COUNTY PROPERTY

BUILDING CHARACTERISTICS

ELEMENT	CD	CONSTRUCTION
Exterior Wall	17	MSNRY STUC 100
Roof Structur	08	IRREGULAR 100
Roof Cover	03	COMP SHNGL 100
Interior Wall	05	DRYWALL 100
Interior Floo	14	CARPET 80
Interior Floo	15	HARDTILE 20
Air Condition	03	CENTRAL 100
Heating Type	04	AIR DUCTED 100
Bedrooms		3 100
Bathrooms		3 100
Frame	01	NONE 100
Stories	1.	1. 100
Architectual	05	CONV 100
Units		0 100
Condition Adj	03	03 100
Kitchen Adjus	01	01 100
Quality	06	06
DOR CODE	5000	IMPROVED AG
MAP NUM		MKT AREA 01
NEIGHBORHOOD/LOC	7416.00	1.00/

AREA TYPE	TOTAL GROSS AREA	PCT OF BASE	YEAR	TOT ADJ AREA	SUBAREA MARKET VALUE
BAS	289	100		289	27,869
BAS	2,093	100		2,093	201,834
FGR	957	55		526	50,724
FOP	96	30		29	2,797
FOP	413	30		124	11,957
FST	30	55		16	1,543
UBM	2,145	20		429	41,370
TOTALS	6,023			3,506	338,094

MARKET ADJUSTMENTS

TYPE	MDL	EFF. AREA	TOT ADJ PTS	EFF. BASE RATE	REPL. COST NEW	AYB	EYB	ECON	FNCT		NORM	% COND
0100	01	3,506	117.9423	132.10	463,143	1998	1998	0	0	0	27.00	73.00

2 SINGLE FAM 100% - 1999 Heated Area: 2382 HX Base Yr 1999

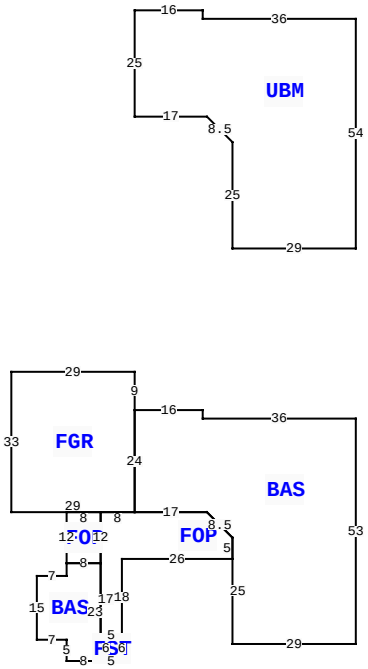

713 SW BRIM ST, LAKE CITY

BLD DATE		LGL DATE	
XF DATE		LAND DATE	04/07/2025 MLU
INC DATE		AG DATE	

VALUATION SUMMARY

VALUATION BY		STANDARD
Tax Group: 3	Tax Dist:	
BUILDING MARKET VALUE		338,094
TOTAL MARKET OB/XF VALUE		12,005
TOTAL LAND VALUE - MARKET		89,280
TOTAL MARKET VALUE		361,606
SOH/AGL Deduction		108,928
ASSESSED VALUE		252,678
TOTAL EXEMPTION VALUE	HX HB	50,722
BASE TAXABLE VALUE		201,956
TOTAL JUST VALUE		439,379
NCON VALUE		0
INCOME VALUE		
PREVIOUS YEAR MKT VALUE		444,011

SALE:2:1: 1/3 INTEREST EACH - 80 AC @ 600 PER ACRE
SALE:1:1: 10.04 AC NEEDED & WANTED TO SELL
XFOB:1:1: PICKED UP IN FIELD

PERMIT NUM	DESCRIPTION	AMT	ISSUED
13545	SFR	380	01/22/1998

SALES DATA

OFF RECORD Number	DATE	TYPE INST	Q U	V I	RSN CD	SALE PRICE
0761/0658	6/12/1992	WD	U	V	12	20,000
GRANTOR: TOMPKINS-MARTIN-JONE						
GRANTEE: TRACY M BUCK						
0685/0715	5/15/1989	WD	U	V		48,300
GRANTOR: THOMAS-STRICKLAND						
GRANTEE: TOMPKINS ETAL						

BUILDING NOTES

BUILDING DIMENSIONS

BAS= W36 N2 W16 FGR= N9 W29 S33 E29 N24$ S24 FOP= W8 FOP= W8 S12 E8 N12$ S12 BAS= W8 S3 W7 S15 E7 S5 E8 N23$ S17 FST= S6 E5 N6 W5$ E5N18 E26 N5 U6 L6 W17$ E17 R6 D6 S25 E29 N53$ PTR= N40 UBM= N54 W36 N2 W16 S25 E17 R6 D6 S25 E29 $ S40$.

EXTRA FEATURES

LN	OB/XF CODE	DESCRIPTION	BLD	CAP	L	W	UNITS	UT	Adj R	ADJ UNIT PRICE	ORIG COND	YEAR ON	YEAR ACTUAL	Q	% COND	OB/XF MKT VALUE	NOTES
1	0166	CONC,PAVMT	0	100	0	0	443.00	UT	1.50	1.50	100	1998	1998	3	100	665	
2	0285	SALVAGE	0	100	0	0	1.00	UT	0.00	0.00	100	2006	2006	3	100	1,000	
3	0040	BARN,POLE	0	100	40	47	1,880.00	UT	5.50	5.50	100	2006	2006	3	100	10,340	

LAND DESCRIPTION

TOTAL OB/XF 12,005

LN	USE CODE	CLS	LAND USE DESCRIPTION	CAP	RD	LOC ZONE	FRONT	DEPTH	TOT LND UTS	UNIT TYPE	DT	DPTH FACT	% COND	TOT ADJ	UNIT PRICE	ADJ UNIT PRICE	LAND VALUE	OTHER ADJUSTMENTS AND NOTES	YEAR	DENSITY	DECL	FRZ	YR	CONSRV
1	0100	C	SFR	100		00	0.00	0.00	1.00	AC		1.00	1.00	1.00	9,000.00	9,000.00	9,000							
2	5600	A	TIMBER 3	0		A-1	0.00	0.00	8.92	AC		1.00	1.00	1.00	281.00	281.00	2,507							
3	9910	M	MKT.VAL.AG	0		00	0.00	0.00	8.92	AC		1.00	1.00	1.00	9,000.00	9,000.00	80,280							

REVIEW DATE 02/12/2024 BY KS Total Acres: 9.92 Total Land Value: 11,507 Market: 80,280 Agricultural: 2,507 Common: 9,000 PRINTED 11/19/2025 BY SYS