LOT 10 BLOCK D CHAPEL HILLS S/D
NW COR OF LOT 10, RUN S 200 FT,
FT, E 25 FT TO POB.

CARSON KELLY KAY/CARSON SEAN PATRICK
719 SW CHAPEL HILL ST
LAKE CITY, FL 32025

2026

06-4S-17-08084-010

COLUMBIA COUNTY PROPERTY

BUILDING CHARACTERISTICS

ELEMENT	CD	CONSTRUCTION
Exterior Wall	19	COMMON BRK 80
Exterior Wall	31	VINYL SID 20
Roof Structur	03	GABLE/HIP 100
Roof Cover	03	COMP SHNGL 100
Interior Wall	05	DRYWALL 100
Interior Floo	14	CARPET 90
Interior Floo	08	SHT VINYL 10
Air Condition	03	CENTRAL 100
Heating Type	04	AIR DUCTED 100
Bedrooms		4 100
Bathrooms		2.5 100
Frame	01	NONE 100
Stories	1.5	1.5 100
Architectual	05	CONV 100
Units		0 100
Condition Adj	03	03 100
Kitchen Adjus	01	01 100
Quality	05	05
DOR CODE	0100	SINGLE FAMILY
MAP NUM		MKT AREA 06
NEIGHBORHOOD/LOC	6417.0900	1.00/

AREA TYPE	TOTAL GROSS AREA	PCT OF BASE	YEAR	TOT ADJ AREA	SUBAREA MARKET VALUE
BAS	1,724	100		1,724	142,148
FCP	528	25		132	10,884
FOP	32	30		10	825
FSP	336	40		134	11,049
FUS	864	100		864	71,239
TOTALS	3,484			2,864	236,144

MARKET ADJUSTMENTS

TYPE	MDL	EFF. AREA	TOT ADJ PTS	EFF. BASE RATE	REPL. COST NEW	AYB	EYB	ECON	FNCT		NORM	% COND
0100	01	2,864	113.2572	126.85	363,298	1969	1969	0	0	0	35.00	65.00

1 SINGLE FAM 0% - 2023 Heated Area: 2588 HX Base Yr

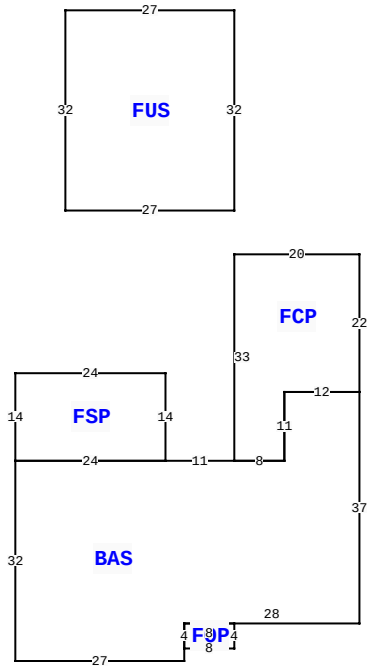

719 SW CHAPEL HILL ST, LAKE CITY

BLD DATE		LGL DATE	
XF DATE		LAND DATE	04/21/2023 MLU
INC DATE		AG DATE	

VALUATION SUMMARY

VALUATION BY	STANDARD
Tax Group: 1	Tax Dist:
BUILDING MARKET VALUE	236,144
TOTAL MARKET OB/XF VALUE	2,640
TOTAL LAND VALUE - MARKET	20,350
TOTAL MARKET VALUE	259,134
SOH/AGL Deduction	0
ASSESSED VALUE	259,134
TOTAL EXEMPTION VALUE	0
BASE TAXABLE VALUE	259,134
TOTAL JUST VALUE	259,134
NCON VALUE	0
INCOME VALUE	
PREVIOUS YEAR MKT VALUE	259,134

PERMIT NUM	DESCRIPTION	AMT	ISSUED
465	ADDN SFR	48	06/20/1995

SALES DATA

OFF RECORD Number	DATE	TYPE INST	Q U	V I	RSN CD	SALE PRICE
1515/1470	5/29/2024	QC	U	I	11	100
GRANTOR: CARSON MICHAEL						
GRANTEE: ABBATE CARA						
1458/1600	2/04/2022	WD	U	I	11	100
GRANTOR: CARSON KEVIN KITPATRI						
GRANTEE: CARSON KELLY						

BUILDING NOTES

BUILDING DIMENSIONS

BAS= W11 FSP= N14 W24 S14 E24$ W24 S32 E27 N2 FOP= E8 N4 W8 S4$ N4 E28 N37 FCP= N22W20 S33 E8 N11 E12$ W12 S11 W8$ PTR=N40 FUS= N32 W27 S32 E27$ S40$.

EXTRA FEATURES

LN	OB/XF CODE	DESCRIPTION	BLD	CAP	L	W	UNITS	UT	Adj R	ADJ UNIT PRICE	ORIG COND	YEAR ON	YEAR ACTUAL	Q	% COND	OB/XF MKT VALUE	NOTES
1	0166	CONC,PAVMT	0	0	0	0	1.00	UT	0.00	0.00	100	0	0	3	100	1,200	
2	0296	SHED METAL	0	0	12	24	288.00	UT	5.00	5.00	100	1993	1993	3	100	1,440	

LAND DESCRIPTION

TOTAL OB/XF 2,640

LN	USE CODE	CLS	LAND USE DESCRIPTION	CAP	RD	LOC ZONE	FRONT	DEPTH	TOT LND UTS	UNIT TYPE	DT	DPTH FACT	% COND	TOT ADJ	UNIT PRICE	ADJ UNIT PRICE	LAND VALUE	OTHER ADJUSTMENTS AND NOTES	YEAR	DENSITY	DECL	FRZ	YR	CONSRV
1	0100	C	SFR	0		*RSF-2	0.00	0.00	1.00	LT		1.00	1.00	1.10	18,500.00	20,350.00	20,350							

REVIEW DATE 09/27/2016 BY DF Total Acres: 0.51 Total Land Value: 20,350 Market: 0 Agricultural: 0 Common: 20,350 PRINTED 11/10/2025 BY SYS