COMM SE COR OF SEC 6, RUN W
159.84 FT TO C/L SR-47, N'LY
ALONG C/L 422.36 FT, W 102.48

FIRST ADVENT CHRISTIAN CHURCH
1881 SW MCFARLANE AVE
LAKE CITY, FL 32025

2026

06-4S-17-08065-000

COLUMBIA COUNTY PROPERTY

BUILDING CHARACTERISTICS

ELEMENT	CD	CONSTRUCTION
Exterior Wall	19	COMMON BRK 100
Roof Structur	03	GABLE/HIP 100
Roof Cover	03	COMP SHNGL 100
Interior Wall	05	DRYWALL 100
Interior Floo	14	CARPET 100
Ceiling	02	F.NOT SUS 100
Air Condition	03	CENTRAL 100
Heating Type	04	AIR DUCTED 100
Fixtures		10 100
Frame	02	WOOD FRAME 100
Story Height		10 100
RMS		12 100
Stories	0	0 100
Units		0 100
Condition Adj	03	03 100
Quality	05	05
DOR CODE	7100	CHURCHES-EX
MAP NUM		MKT AREA 06
NEIGHBORHOOD/LOC	6417.00	1.00/

AREA TYPE	TOTAL GROSS AREA	PCT OF BASE	YEAR	TOT ADJ AREA	SUBAREA MARKET VALUE
BAS	7,189	100		7,189	247,122
CAN	156	30		47	1,616
CAN	941	30		282	9,694
TOTALS	8,286			7,518	258,431

MARKET ADJUSTMENTS

TYPE	MDL	EFF. AREA	TOT ADJ PTS	EFF. BASE RATE	REPL. COST NEW	AYB	EYB	ECON	FNCT		NORM	% COND
9100	04	7,518	89.2800	68.75	516,862	1962	1962	0	0	0	50.00	50.00

1 CHURCH 0% - 0 Heated Area: 7189 HX Base Yr

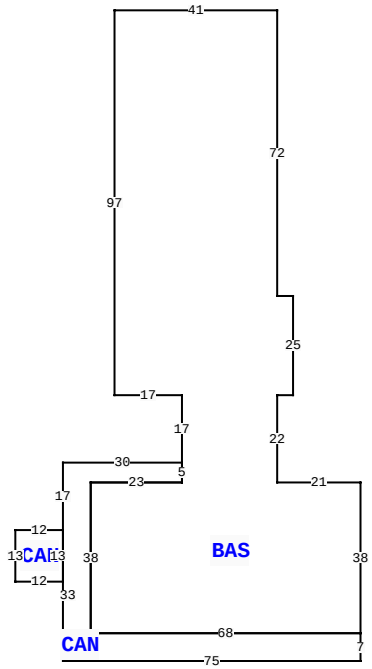

1881 SW MCFARLANE AVE, LAKE CITY

BLD DATE		LGL DATE	
XF DATE		LAND DATE	
INC DATE		AG DATE	

VALUATION SUMMARY

VALUATION BY		STANDARD
Tax Group: 1	Tax Dist:	
BUILDING MARKET VALUE		258,431
TOTAL MARKET OB/XF VALUE		18,400
TOTAL LAND VALUE - MARKET		198,304
TOTAL MARKET VALUE		475,135
SOH/AGL Deduction		0
ASSESSED VALUE		475,135
TOTAL EXEMPTION VALUE	02	475,135
BASE TAXABLE VALUE		0
TOTAL JUST VALUE		475,135
NCON VALUE		0
INCOME VALUE		
PREVIOUS YEAR MKT VALUE		475,135

PERMIT NUM	DESCRIPTION	AMT	ISSUED
1118	CHURCH	135	12/15/2008
0836	MAINT/ALTR	0	06/04/2008
107	MAINT/ALTR	50	03/27/2007
760	ADDN COMM	284	07/17/1996

SALES DATA

OFF RECORD Number	DATE	TYPE INST	Q U	V I	RSN CD	SALE PRICE

BUILDING NOTES

BUILDING DIMENSIONS

BAS= W41 S97 E17 S17 CAN= W30 S17 CAN= W12 S13 E12 N13$ S33 E75 N7 W68 N38E23 N5$S5 W23 S38 E68 N38 W21 N22 E4 N25 W4 N72$.

EXTRA FEATURES

LN	OB/XF CODE	DESCRIPTION	BLD	CAP	L	W	UNITS	UT	Adj R	ADJ UNIT PRICE	ORIG COND	YEAR ON	YEAR ACTUAL	Q	% COND	OB/XF MKT VALUE	NOTES
1	0296	SHED METAL	0	0	12	20	240.00	UT	5.00	5.00	100	1993	1993	3	100	1,200	
2	0070	CARPORT UF	0	0	20	20	400.00	UT	3.00	3.00	100	1993	1993	3	100	1,200	
3	0120	CLFENCE 4	0	0	0	0	1.00	UT	0.00	0.00	100	1993	1993	3	100	500	
4	0166	CONC,PAVMT	0	0	0	0	1.00	UT	0.00	0.00	100	2011	2011	3	100	100	
5	0262	PRCH,FOP	0	0	0	0	1.00	UT	0.00	0.00	100	2011	2011	3	100	300	
6	0140	CLFENCE 6	0	0	0	0	1.00	UT	0.00	0.00	100	2011	2011	3	100	100	
7	0260	PAVEMENT-A	0	0	0	0	1.00	UT	0.00	0.00	100	2016	2016	3	100	15,000	

LAND DESCRIPTION

TOTAL OB/XF 18,400

LN	USE CODE	CLS	LAND USE DESCRIPTION	CAP	RD	LOC ZONE	FRONT	DEPTH	TOT LND UTS	UNIT TYPE	DT	DPTH FACT	% COND	TOT ADJ	UNIT PRICE	ADJ UNIT PRICE	LAND VALUE	OTHER ADJUSTMENTS AND NOTES	YEAR	DENSITY	DECL	FRZ	YR	CONSRV
1	7100	C	CHURCH	0		*RSF-	240.00	418.00	88,135.00	SF		1.00	1.00	1.00	2.25	2.25	198,304							

REVIEW DATE 09/26/2016 BY DF Total Acres: 2.02 Total Land Value: 198,304 Market: 0 Agricultural: 0 Common: 198,304 PRINTED 11/17/2025 BY SYS