LOT 62 CYPRESS LANDING S/D.
WD 1038-2123, WD 1191-250, LE 14

ALTMAN ALICE M
1403 SW INDIAN GLN
LAKE CITY, FL 32025

2026

06-4S-17-08028-162

COLUMBIA COUNTY PROPERTY

BUILDING CHARACTERISTICS

ELEMENT	CD	CONSTRUCTION
Exterior Wall	32	HARDIE BRD 70
Exterior Wall	19	COMMON BRK 30
Roof Structur	03	GABLE/HIP 100
Roof Cover	03	COMP SHNGL 100
Interior Wall	05	DRYWALL 100
Interior Floo	14	CARPET 80
Interior Floo	08	SHT VINYL 20
Air Condition	03	CENTRAL 100
Heating Type	04	AIR DUCTED 100
Bedrooms		3 100
Bathrooms		2 100
Frame	02	WOOD FRAME 100
Stories	1.	1. 100
Architectual	05	CONV 100
Units		0 100
Quality	05	05
DOR CODE	0100	SINGLE FAMILY
MAP NUM		MKT AREA 06
NEIGHBORHOOD/LOC	6417.1200	1.00/

AREA TYPE	TOTAL GROSS AREA	PCT OF BASE	YEAR	TOT ADJ AREA	SUBAREA MARKET VALUE
BAS	1,532	100		1,532	157,432
FGR	432	55		238	24,458
FOP	92	30		28	2,878
FOP	104	30		31	3,186
TOTALS	2,160			1,829	187,952

MARKET ADJUSTMENTS

TYPE	MDL	EFF. AREA	TOT ADJ PTS	EFF. BASE RATE	REPL. COST NEW	AYB	EYB	ECON	FNCT		NORM	% COND
0100	01	1,829	110.5440	123.81	226,448	2008	2008	0	0	0	17.00	83.00

1 SINGLE FAM 100% - 2011 Heated Area: 1532 HX Base Yr 2011

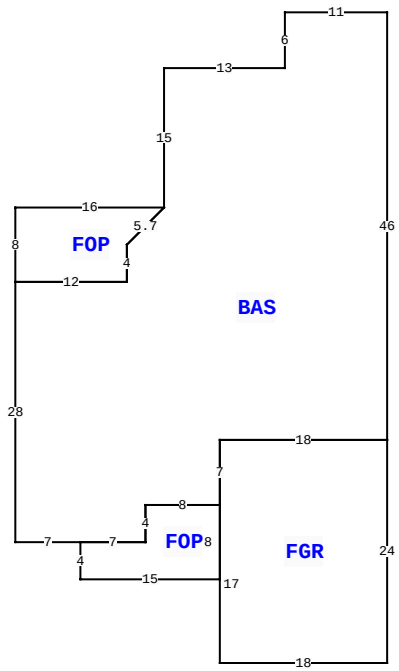

1403 SW INDIAN GLN, LAKE CITY

BLD DATE		LGL DATE	
XF DATE		LAND DATE	04/21/2023 MLU
INC DATE		AG DATE	

VALUATION SUMMARY

VALUATION BY		STANDARD
Tax Group: 1	Tax Dist:	
BUILDING MARKET VALUE		187,952
TOTAL MARKET OB/XF VALUE		1,728
TOTAL LAND VALUE - MARKET		22,500
TOTAL MARKET VALUE		212,180
SOH/AGL Deduction		75,286
ASSESSED VALUE		136,894
TOTAL EXEMPTION VALUE	HX HB	50,722
BASE TAXABLE VALUE		86,172
TOTAL JUST VALUE		212,180
NCON VALUE		0
INCOME VALUE		
PREVIOUS YEAR MKT VALUE		214,444

PERMIT NUM	DESCRIPTION	AMT	ISSUED
69	SFR	451	03/05/2007

SALES DATA

OFF RECORD Number	DATE	TYPE INST	Q U	V I	RSN CD	SALE PRICE
1405/0261	1/30/2020	LE	U	I	14	100
GRANTOR: ALICE M ALTMAN (ENH L						
GRANTEE: SHANNON M DURRANCE						
1191/0250	3/19/2010	WD	Q	I	01	125,000
GRANTOR: GATEWAY DEVELOPERS OF						
GRANTEE: ALICE M ALTMAN						

BUILDING NOTES

BUILDING DIMENSIONS

BAS= W11 S6 W13 S15 FOP= W16 S8 E12 N4 R4 U4 $ D4 L4 S4 W12 S28 E7 FOP= S4 E15 N8 W8 S4 W7$ E7 N4 E8 FGR= S17 E18 N24 W18 S7$ N7 E18 N46$.

EXTRA FEATURES

LN	OB/XF CODE	DESCRIPTION	BLD	CAP	L	W	UNITS	UT	Adj R	ADJ UNIT PRICE	ORIG COND	YEAR ON	YEAR ACTUAL	Q	% COND	OB/XF MKT VALUE	NOTES
1	0166	CONC,PAVMT	0	100	0	0	576.00	UT	3.00	3.00	100	2008	2008	3	100	1,728	

LAND DESCRIPTION

TOTAL OB/XF 1,728

LN	USE CODE	CLS	LAND USE DESCRIPTION	CAP	RD	LOC ZONE	FRONT	DEPTH	TOT LND UTS	UNIT TYPE	DT	DPTH FACT	% COND	TOT ADJ	UNIT PRICE	ADJ UNIT PRICE	LAND VALUE	OTHER ADJUSTMENTS AND NOTES	YEAR	DENSITY	DECL	FRZ	YR	CONSRV
1	0100	C	SFR	100			0.00	0.00	1.00	LT		1.00	1.00	1.00	22,500.00	22,500.00	22,500							

REVIEW DATE 09/26/2016 BY DF Total Acres: 0.16 Total Land Value: 22,500 Market: 0 Agricultural: 0 Common: 22,500 PRINTED 11/03/2025 BY SYS