LOT 58 CYPRESS LANDING S/D.
WD 1038-2123, WD 1185-1826, WD 1

FISH MIA LEIGH/GOODWIN TYLER SCOTT
1335 SW INDIAN GLN
LAKE CITY, FL 32025

2026

06-4S-17-08028-158

COLUMBIA COUNTY PROPERTY

BUILDING CHARACTERISTICS

ELEMENT	CD	CONSTRUCTION
Exterior Wall	16	WD FR STUC 80
Exterior Wall	19	COMMON BRK 20
Roof Structur	08	IRREGULAR 100
Roof Cover	03	COMP SHNGL 100
Interior Wall	05	DRYWALL 100
Interior Floo	14	CARPET 80
Interior Floo	13	LAM/VNLPLK 20
Air Condition	03	CENTRAL 100
Heating Type	04	AIR DUCTED 100
Bedrooms		3 100
Bathrooms		2 100
Frame	02	WOOD FRAME 100
Stories	1.	1. 100
Architectual	05	CONV 100
Units		0 100
Condition Adj	04	04 100
Quality	05	05

DOR CODE 0100 SINGLE FAMILY
MAP NUM | MKT AREA 06
NEIGHBORHOOD/LOC 6417.1200 1.00/

AREA TYPE	TOTAL GROSS AREA	PCT OF BASE	YEAR	TOT ADJ AREA	SUBAREA MARKET VALUE
BAS	1,514	100		1,514	163,452
FGR	450	55		248	26,774
FSP	92	40		37	3,994
FSP	104	40		42	4,535
TOTALS	2,160			1,841	198,755

MARKET ADJUSTMENTS

TYPE	MDL	EFF. AREA	TOT ADJ PTS	EFF. BASE RATE	REPL. COST NEW	AYB	EYB	ECON	FNCT		NORM	% COND
0100	01	1,841	126.5000	141.68	260,833	2008	2008	0	0	0	23.80	76.20

1 SINGLE FAM 100% - 2022 Heated Area: 1514 HX Base Yr 2022

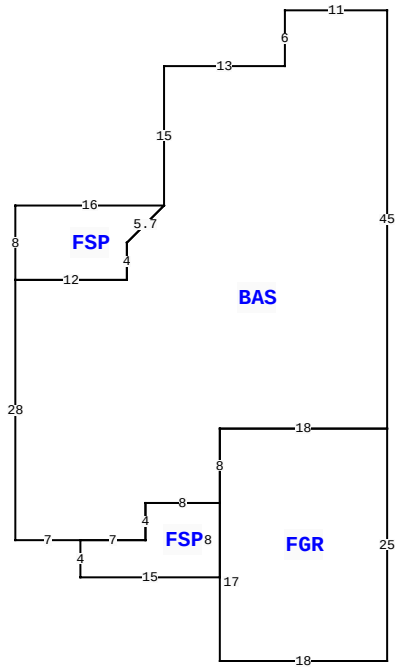

1335 SW INDIAN GLN, LAKE CITY

BLD DATE		LGL DATE	
XF DATE		LAND DATE	04/21/2023 MLU
INC DATE		AG DATE	

VALUATION SUMMARY

VALUATION BY		STANDARD
Tax Group: 1	Tax Dist:	
BUILDING MARKET VALUE		198,755
TOTAL MARKET OB/XF VALUE		1,698
TOTAL LAND VALUE - MARKET		22,500
TOTAL MARKET VALUE		222,953
SOH/AGL Deduction		23,007
ASSESSED VALUE		199,946
TOTAL EXEMPTION VALUE	HX HB	50,722
BASE TAXABLE VALUE		149,224
TOTAL JUST VALUE		222,953
NCON VALUE		0
INCOME VALUE		
PREVIOUS YEAR MKT VALUE		226,604

PERMIT NUM	DESCRIPTION	AMT	ISSUED
67	SFR	451	03/05/2007

SALES DATA

OFF RECORD Number	DATE	TYPE INST	Q U	V I	RSN CD	SALE PRICE
1496/1566	7/13/2023	WD	U	I	11	100
GRANTOR: FISH LINDA MICHELLE						
GRANTEE: FISH MIA LEIGH						
1460/1847	3/01/2022	QC	U	I	11	100
GRANTOR: FISH MIA LEIGH						
GRANTEE: FISH MIA LEIGH						

BUILDING NOTES

BUILDING DIMENSIONS

BAS=[ORIG=0,0] W11 S6 W13 S15 D4L4 S4 W12 S28 E7 E7 N4 E8 N8 E18 N45 $
FGR=[ORIG=-18,53] S17 E18 N25 W18 S8 $
FSP=[ORIG=-24,21] W16 S8 E12 N4 U4R4 $
FSP=[ORIG=-33,57] S4 E15 N8 W8 S4 W7 $
.

EXTRA FEATURES

LN	OB/XF CODE	DESCRIPTION	BLD	CAP	L	W	UNITS	UT	Adj R	ADJ UNIT PRICE	ORIG COND	YEAR ON	YEAR ACTUAL	Q	% COND	OB/XF MKT VALUE	NOTES
1	0166	CONC,PAVMT	0	100	0	0	566.00	UT	3.00	3.00	100	2008	2008	3	100	1,698	

LAND DESCRIPTION

TOTAL OB/XF 1,698

LN	USE CODE	CLS	LAND USE DESCRIPTION	CAP	RD	LOC ZONE	FRONT	DEPTH	TOT LND UTS	UNIT TYPE	DT	DPTH FACT	% COND	TOT ADJ	UNIT PRICE	ADJ UNIT PRICE	LAND VALUE	OTHER ADJUSTMENTS AND NOTES	YEAR	DENSITY	DECL	FRZ	YR	CONSRV
1	0100	C	SFR	100			0.00	0.00	1.00	LT		1.00	1.00	1.00	22,500.00	22,500.00	22,500							

REVIEW DATE 09/22/2016 BY DF Total Acres: 0.17 Total Land Value: 22,500 Market: 0 Agricultural: 0 Common: 22,500 PRINTED 11/03/2025 BY SYS