LOT 52 CYPRESS LANDING S/D.
WD 1038-2123, WD 1161-638

CREWS KATHRYN A
912 SW GATOR CT
LAKE CITY, FL 32025

2026

06-4S-17-08028-152

COLUMBIA COUNTY PROPERTY

BUILDING CHARACTERISTICS

ELEMENT	CD	CONSTRUCTION
Exterior Wall	16	WD FR STUC 80
Exterior Wall	19	COMMON BRK 20
Roof Structur	03	GABLE/HIP 100
Roof Cover	03	COMP SHNGL 100
Interior Wall	05	DRYWALL 100
Interior Floo	14	CARPET 80
Interior Floo	15	HARDTILE 20
Air Condition	03	CENTRAL 100
Heating Type	04	AIR DUCTED 100
Bedrooms		3 100
Bathrooms		2 100
Frame	02	WOOD FRAME 100
Stories	1.	1. 100
Architectual	05	CONV 100
Units		0 100
Quality	05	05

DOR CODE	0100	SINGLE FAMILY	
MAP NUM		MKT AREA	06
NEIGHBORHOOD/LOC	6417.1200	1.00/	

AREA TYPE	TOTAL GROSS AREA	PCT OF BASE	YEAR	TOT ADJ AREA	SUBAREA MARKET VALUE
BAS	1,582	100		1,582	150,083
FGR	378	55		208	19,733
FOP	92	30		28	2,656
FOP	109	30		33	3,131
TOTALS	2,161			1,851	175,603

MARKET ADJUSTMENTS

TYPE	MDL	EFF. AREA	TOT ADJ PTS	EFF. BASE RATE	REPL. COST NEW	AYB	EYB	ECON	FNCT		NORM	% COND
0100	01	1,851	111.1620	124.50	230,450	2008	2008	0	0	0	23.80	76.20

1 SINGLE FAM 100% - 2009 Heated Area: 1582 HX Base Yr 2009

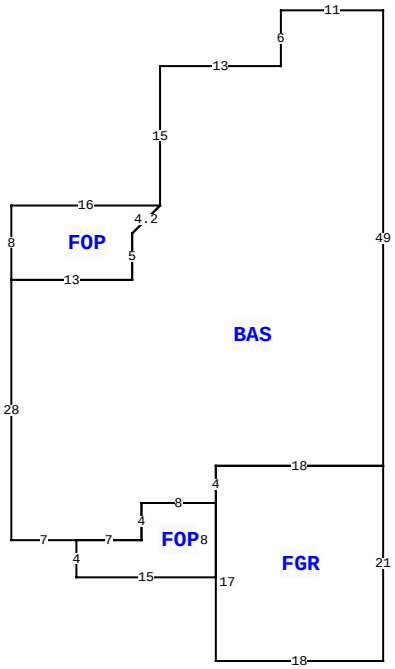

912 SW GATOR CT, LAKE CITY

BLD DATE		LGL DATE	
XF DATE		LAND DATE	04/21/2023 MLU
INC DATE		AG DATE	

VALUATION SUMMARY

VALUATION BY		STANDARD
Tax Group: 1	Tax Dist:	
BUILDING MARKET VALUE		175,603
TOTAL MARKET OB/XF VALUE		2,295
TOTAL LAND VALUE - MARKET		22,500
TOTAL MARKET VALUE		200,398
SOH/AGL Deduction		62,940
ASSESSED VALUE		137,458
TOTAL EXEMPTION VALUE	HX HB	50,722
BASE TAXABLE VALUE		86,736
TOTAL JUST VALUE		200,398
NCON VALUE		0
INCOME VALUE		
PREVIOUS YEAR MKT VALUE		203,624

SALE:1:1: SALE IS FOR 41 LOTS IN CYPRESS LANDING S

PERMIT NUM	DESCRIPTION	AMT	ISSUED
60	SFR	451	02/28/2007

SALES DATA

OFF RECORD Number	DATE	TYPE INST	Q U	V I	RSN CD	SALE PRICE
1161/0638	10/24/2008	WD	Q	I		176,900
GRANTOR: GATEWAY DEVELOPERS OF						
GRANTEE: KATHRYN A CREWS						
1038/2123	2/15/2005	WD	Q	V	01	535,000
GRANTOR: RFJ PROPERTIES						
GRANTEE: GATEWAY DEVELOPERS						

BUILDING NOTES

BUILDING DIMENSIONS

BAS= W11 S6 W13 S15 FOP= W16 S8 E13 N5 R3 U3 $ D3 L3 S5 W13 S28 E7 FOP= S4 E15 N8 W8 S4 W7$ E7 N4 E8 FGR= S17 E18 N21 W18 S4$ N4 E18 N49$.

EXTRA FEATURES

LN	OB/XF CODE	DESCRIPTION	BLD	CAP	L	W	UNITS	UT	Adj R	ADJ UNIT PRICE	ORIG COND	YEAR ON	YEAR ACTUAL	Q	% COND	OB/XF MKT VALUE	NOTES
1	0166	CONC,PAVMT	0	100	0	0	765.00	UT	3.00	3.00	100	2008	2008	3	100	2,295	

LAND DESCRIPTION

TOTAL OB/XF 2,295

LN	USE CODE	CLS	LAND USE DESCRIPTION	CAP	RD	LOC ZONE	FRONT	DEPTH	TOT LND UTS	UNIT TYPE	DT	DPTH FACT	% COND	TOT ADJ	UNIT PRICE	ADJ UNIT PRICE	LAND VALUE	OTHER ADJUSTMENTS AND NOTES	YEAR	DENSITY	DECL	FRZ	YR	CONSRV
1	0100	C	SFR	100			0.00	0.00	1.00	LT		1.00	1.00	1.00	22,500.00	22,500.00	22,500							

REVIEW DATE 09/22/2016 BY DF Total Acres: 0.14 Total Land Value: 22,500 Market: 0 Agricultural: 0 Common: 22,500 PRINTED 10/03/2025 BY SYS