COMM INTERS OF W R/W ALEXANDRIA
LOT 22, RUN W 137.03 FT TO POB,
TO S R/W FAIRFAX CT WEST, RUN W

EARLS JORDAN T
1162 SW FAIRFAX GLN
LAKE CITY, FL 32025-0428

2025

06-4S-17-08019-119

COLUMBIA COUNTY PROPERTY

BUILDING CHARACTERISTICS

ELEMENT	CD	CONSTRUCTION
Exterior Wall	31	VINYL SID 100
Roof Structur	03	GABLE/HIP 100
Roof Cover	14	PREFIN MT 100
Interior Wall	05	DRYWALL 100
Interior Floo	14	CARPET 80
Interior Floo	12	HARDWOOD 20
Air Condition	03	CENTRAL 100
Heating Type	04	AIR DUCTED 100
Bedrooms		3 100
Bathrooms		3 100
Frame	01	NONE 100
Stories	1.	1. 100
Architectual	05	CONV 100
Units		0 100
Condition Adj	03	03 100
Kitchen Adjus	01	01 100
Quality	05	05
DOR CODE	0100	SINGLE FAMILY
MAP NUM		MKT AREA 06
NEIGHBORHOOD/LOC	6417.0700	1.00/

AREA TYPE	TOTAL GROSS AREA	PCT OF BASE	YEAR	TOT ADJ AREA	SUBAREA MARKET VALUE
BAS	360	100		360	39,519
BAS	1,249	100		1,249	137,108
FEP	65	80		52	5,708
FOP	16	30		5	549
FOP	108	30		32	3,513
FOP	180	30		54	5,928
TOTALS	1,978			1,752	192,325

MARKET ADJUSTMENTS

TYPE	MDL	EFF. AREA	TOT ADJ PTS	EFF. BASE RATE	REPL. COST NEW	AYB	EYB	ECON	FNCT		NORM	% COND
0100	01	1,752	118.8000	133.06	233,121	1988	2010	0	0	0	17.50	82.50

1 SINGLE FAM – 0% - 2021 Heated Area: 1609 HX Base Yr

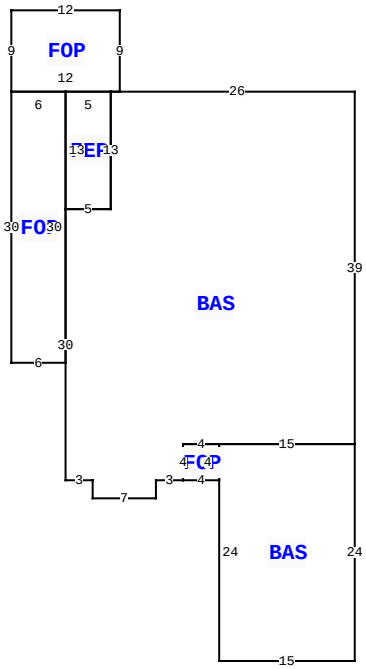

1162 SW FAIRFAX GLN, LAKE CITY

BLD DATE		LGL DATE	
XF DATE		LAND DATE	04/21/2023 MLU
INC DATE		AG DATE	

VALUATION SUMMARY

VALUATION BY	STANDARD
Tax Group: 1	Tax Dist:
BUILDING MARKET VALUE	192,325
TOTAL MARKET OB/XF VALUE	7,410
TOTAL LAND VALUE - MARKET	40,500
TOTAL MARKET VALUE	240,235
SOH/AGL Deduction	11,893
ASSESSED VALUE	228,342
TOTAL EXEMPTION VALUE	0
BASE TAXABLE VALUE	228,342
TOTAL JUST VALUE	240,235
NCON VALUE	0
INCOME VALUE	
PREVIOUS YEAR MKT VALUE	230,941

SALE:1:1: 2 PARCELS - 1 DEED

PERMIT NUM	DESCRIPTION	AMT	ISSUED

SALES DATA

OFF RECORD Number	DATE	TYPE INST	Q U /	V I /	RSN CD	SALE PRICE
1437/1373	12/01/2020	QC	U	I	11	100
GRANTOR: EARLS JORDAN T						
GRANTEE: EARLS JORDAN T						
1403/0091	1/09/2020	WD	Q	I	01	169,900
GRANTOR: MARY ANDREWSKIEWICZ &						
GRANTEE: JORDAN T EARLS						

BUILDING NOTES

BUILDING DIMENSIONS

BAS= W26 FOP= N9 W12 S9 E12$ W1 FEP= W5 FOP= W6 S30E6 N30$
S13 E5 N13$S13 W5 S30 E3 S2 E7 N2 E3 FOP= E4 N4 W4 S4$ N4 E4
BAS= S24 E15 N24 W15$ E15 N39$.

EXTRA FEATURES

LN	OB/XF CODE	DESCRIPTION	BLD	CAP	L	W	UNITS	UT	Adj R	ADJ UNIT PRICE	ORIG COND	YEAR ON	YEAR ACTUAL	Q	% COND	OB/XF MKT VALUE	NOTES
1	0166	CONC,PAVMT	0	0	0	0	1.00	UT	0.00	0.00	100	0	0	3	100	560	
2	0180	FPLC 1STRY	0	0	0	0	1.00	UT	2,000.00	2,000.00	100	0	0	3	100	2,000	
3	0169	FENCE/WOOD	0	0	50	8	400.00	UT	7.50	7.50	75	1993	1993	3	75	2,250	
4	0296	SHED METAL	0	0	10	12	200.00	UT	5.00	5.00	100	1993	1993	3	100	1,000	
5	0296	SHED METAL	0	0	0	0	1.00	UT	0.00	0.00	100	2016	2016	3	100	1,600	

LAND DESCRIPTION

TOTAL OB/XF 7,410

LN	USE CODE	CLS	LAND USE DESCRIPTION	CAP	RD	LOC ZONE	FRONT	DEPTH	TOT LND UTS	UNIT TYPE	DT	DPTH FACT	% COND	TOT ADJ	UNIT PRICE	ADJ UNIT PRICE	LAND VALUE	OTHER ADJUSTMENTS AND NOTES	YEAR	DENSITY	DECL	FRZ	YR	CONSRV
1	0100	C	SFR	0		*RMF-1	0.00	0.00	1.00	LT		1.00	1.00	0.90	22,500.00	20,250.00	20,250							
2	0000	C	VAC RES	0		*RMF-1	0.00	0.00	1.00	LT		1.00	1.00	0.90	22,500.00	20,250.00	20,250							

REVIEW DATE 09/28/2016 BY DF Total Acres: 0.30 Total Land Value: 40,500 Market: 0 Agricultural: 0 Common: 40,500 PRINTED 06/25/2025 BY SYS