COMM NE COR OF LOT 1 BLOCK 1
GRANDVIEW VILLAGE, RUN W 55 FT
FOR POB, RUN S 120.44 FT TO N

DUNN CHRISTIE D
1145 SW FAIRFAX GLN
LAKE CITY, FL 32025

2026

06-4S-17-08019-102

COLUMBIA COUNTY PROPERTY

BUILDING CHARACTERISTICS

ELEMENT	CD	CONSTRUCTION
Exterior Wall	19	COMMON BRK 90
Exterior Wall	12	CEDAR 10
Roof Structur	03	GABLE/HIP 100
Roof Cover	03	COMP SHNGL 100
Interior Wall	05	DRYWALL 100
Interior Floo	14	CARPET 60
Interior Floo	15	HARDTILE 40
Air Condition	03	CENTRAL 100
Heating Type	04	AIR DUCTED 100
Bedrooms		3 100
Bathrooms		2 100
Frame	01	NONE 100
Stories	1.	1. 100
Architectual	05	CONV 100
Units		0 100
Condition Adj	03	03 100
Kitchen Adjus	01	01 100
Quality	05	05
DOR CODE	0100	SINGLE FAMILY
MAP NUM		MKT AREA 06
NEIGHBORHOOD/LOC	6417.0700	1.00/

AREA TYPE	TOTAL GROSS AREA	PCT OF BASE	YEAR	TOT ADJ AREA	SUBAREA MARKET VALUE
BAS	1,134	100		1,134	117,454
FGR	288	55		158	16,365
FOP	42	30		13	1,346
PTO	112	5		6	622
TOTALS	1,576			1,311	135,787

MARKET ADJUSTMENTS

TYPE	MDL	EFF. AREA	TOT ADJ PTS	EFF. BASE RATE	REPL. COST NEW	AYB	EYB	ECON	FNCT		NORM	% COND
0100	01	1,311	123.3000	138.10	181,049	1994	2000	0	0	0	25.00	75.00

1 SINGLE FAM 100% - 2018 Heated Area: 1134 HX Base Yr 2018

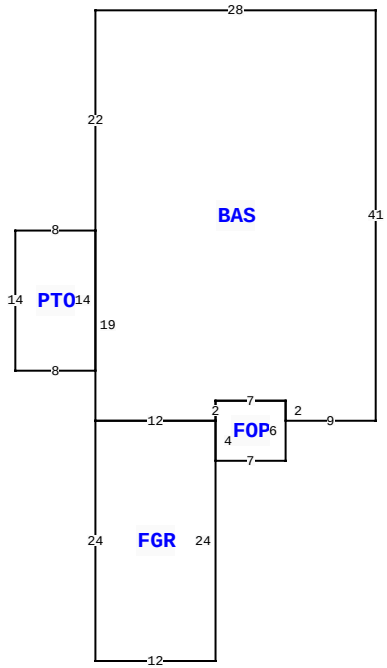

1145 SW FAIRFAX GLN, LAKE CITY

BLD DATE		LGL DATE	
XF DATE		LAND DATE	04/21/2023 MLU
INC DATE		AG DATE	

VALUATION SUMMARY

VALUATION BY		STANDARD
Tax Group: 1	Tax Dist:	
BUILDING MARKET VALUE		135,787
TOTAL MARKET OB/XF VALUE		1,450
TOTAL LAND VALUE - MARKET		22,500
TOTAL MARKET VALUE		159,737
SOH/AGL Deduction		54,273
ASSESSED VALUE		105,464
TOTAL EXEMPTION VALUE	HX HB	50,722
BASE TAXABLE VALUE		54,742
TOTAL JUST VALUE		159,737
NCON VALUE		0
INCOME VALUE		
PREVIOUS YEAR MKT VALUE		161,547

SALE:1:1: PART OF LOTS 2 & 3 BLK 1 GRANDVIEW

PERMIT NUM	DESCRIPTION	AMT	ISSUED
007	SFR	28,000	01/11/1994

SALES DATA

OFF RECORD Number	DATE	TYPE INST	Q U	V I	RSN CD	SALE PRICE
1381/0690	3/23/2019	QC	U	I	11	54,500
GRANTOR: DOUGLAS W DAVIS JR						
GRANTEE: CHRISTIE D DUNN						
1350/1574	12/26/2017	WD	Q	I	01	109,000
GRANTOR: GATEWAY DEVELOPMENT L						
GRANTEE: CHRISTIE D DUNN & D						

BUILDING NOTES

BUILDING DIMENSIONS

BAS= W28 S22 PTO= W8 S14 E8 N14$ S19 FGR= S24 E12 N24 W12$
E12 FOP= S4 E7 N6 W7 S2$ N2E7 S2 E9 N41$.

EXTRA FEATURES

LN	OB/XF CODE	DESCRIPTION	BLD	CAP	L	W	UNITS	UT	Adj R	ADJ UNIT PRICE	ORIG COND	YEAR ON	YEAR ACTUAL	Q	% COND	OB/XF MKT VALUE	NOTES
1	0166	CONC,PAVMT	0	100	10	30	300.00	UT	2.00	2.00	100	0	0	3	100	600	
2	0166	CONC,PAVMT	0	100	3	30	90.00	UT	2.00	2.00	100	0	0	3	100	180	
3	0296	SHED METAL	0	100	8	8	64.00	UT	5.00	5.00	50	1993	1993	3	50	160	
4	0169	FENCE/WOOD	0	100	0	0	136.00	UT	7.50	7.50	50	1993	1993	3	50	510	

LAND DESCRIPTION

TOTAL OB/XF 1,450

LN	USE CODE	CLS	LAND USE DESCRIPTION	CAP	RD	LOC ZONE	FRONT	DEPTH	TOT LND UTS	UNIT TYPE	DT	DPTH FACT	% COND	TOT ADJ	UNIT PRICE	ADJ UNIT PRICE	LAND VALUE	OTHER ADJUSTMENTS AND NOTES	YEAR	DENSITY	DECL	FRZ	YR	CONSRV
1	0100	C	SFR	100		*RMF-1	0.00	0.00	1.00	LT		1.00	1.00	1.00	22,500.00	22,500.00	22,500							

REVIEW DATE 09/21/2016 BY DF Total Acres: 0.16 Total Land Value: 22,500 Market: 0 Agricultural: 0 Common: 22,500 PRINTED 11/07/2025 BY SYS