COMM NW COR OF SW1/4 OF NE1/4, R FT, E 554.76 FT FOR POB, CONT E 132.34 FT, W 119.88 FT, N 131.15

MILLER JAY R/MILLER MEGAN LEE
870 SW GRANDVIEW ST
LAKE CITY, FL 32025-6552

2025

06-4S-17-07987-000

COLUMBIA COUNTY PROPERTY

BUILDING CHARACTERISTICS

ELEMENT	CD	CONSTRUCTION
Exterior Wall	31	VINYL SID 100
Roof Structur	08	IRREGULAR 100
Roof Cover	03	COMP SHNGL 100
Interior Wall	05	DRYWALL 100
Interior Floo	12	HARDWOOD 50
Interior Floo	14	CARPET 50
Air Condition	03	CENTRAL 100
Heating Type	04	AIR DUCTED 100
Bedrooms		4 100
Bathrooms		3 100
Frame	01	NONE 100
Stories	1.5	1.5 100
Architectual	05	CONV 100
Units		0 100
Condition Adj	03	03 100
Kitchen Adjus	02	02 100
Quality	05	05
DOR CODE	0100	SINGLE FAMILY
MAP NUM		MKT AREA 06
NEIGHBORHOOD/LOC	6417.00	1.00/

AREA TYPE	TOTAL GROSS AREA	PCT OF BASE	YEAR	TOT ADJ AREA	SUBAREA MARKET VALUE
BAS	1,383	100		1,383	126,374
FGR	440	55		242	22,113
FOP	76	30		23	2,101
FUS	418	100		418	38,195
USP	128	35		45	4,112
TOTALS	2,445			2,111	192,897

MARKET ADJUSTMENTS

TYPE	MDL	EFF. AREA	TOT ADJ PTS	EFF. BASE RATE	REPL. COST NEW	AYB	EYB	ECON	FNCT		NORM	% COND
0100	01	2,111	125.5196	140.58	296,764	1981	1981	0	0	0	35.00	65.00

1 SINGLE FAM – 100% - 2017 Heated Area: 1801 HX Base Yr 2017

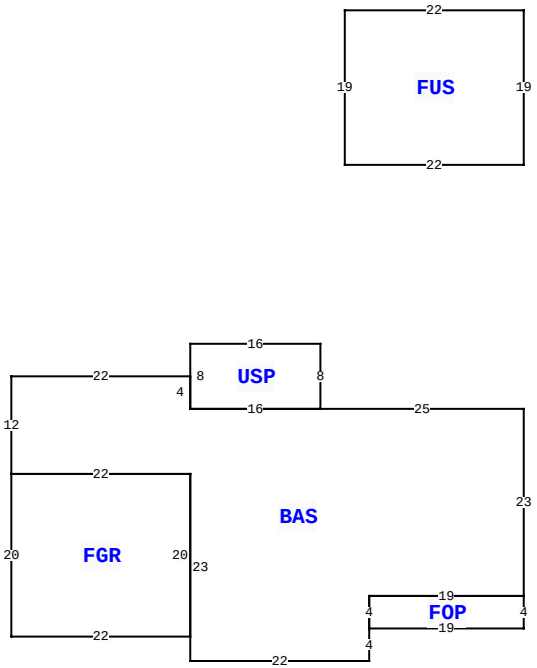

870 SW GRANDVIEW ST, LAKE CITY

BLD DATE		LGL DATE	
XF DATE		LAND DATE	04/21/2023 MLU
INC DATE		AG DATE	

VALUATION SUMMARY

VALUATION BY		STANDARD
Tax Group: 1	Tax Dist:	
BUILDING MARKET VALUE		192,897
TOTAL MARKET OB/XF VALUE		300
TOTAL LAND VALUE - MARKET		25,900
TOTAL MARKET VALUE		219,097
SOH/AGL Deduction		99,308
ASSESSED VALUE		119,789
TOTAL EXEMPTION VALUE	HX HB	50,722
BASE TAXABLE VALUE		69,067
TOTAL JUST VALUE		219,097
NCON VALUE		0
INCOME VALUE		
PREVIOUS YEAR MKT VALUE		207,050

PERMIT NUM	DESCRIPTION	AMT	ISSUED

SALES DATA

OFF RECORD Number	DATE	TYPE INST	Q U	V I	RSN CD	SALE PRICE
1321/1898	8/29/2016	WD	Q	I	01	129,000
GRANTOR: DAVID & NANCY CHANNEL						
GRANTEE: JAY R & MEGAN LEE M						
1283/1272	10/17/2014	WD	U	I	12	81,300
GRANTOR: JP MORGAN CHASE BANK						
GRANTEE: NANCY & DAVID CHANN						

BUILDING NOTES

BUILDING DIMENSIONS

BAS= W25 USP= N8 W16 S8 E16$ W16 N4 W22 S12 FGR= S20E22 N20 W22$ E22 S23 E22 N4 FOP= E19 N4 W19 S4$ N4 E19 N23$ PTR=N30 FUS= N19 W22 S19E22$ S30$.

EXTRA FEATURES

LN	OB/XF CODE	DESCRIPTION	BLD	CAP	L	W	UNITS	UT	Adj R	ADJ UNIT PRICE	ORIG COND	YEAR ON	YEAR ACTUAL	Q	% COND	OB/XF MKT VALUE	NOTES
1	0166	CONC,PAVMT	0	100	0	0	1.00	UT	0.00	0.00	100	0	0	3	100	300	

LAND DESCRIPTION

TOTAL OB/XF 300

LN	USE CODE	CLS	LAND USE DESCRIPTION	CAP	RD	LOC ZONE	FRONT	DEPTH	TOT LND UTS	UNIT TYPE	DT	DPTH FACT	% COND	TOT ADJ	UNIT PRICE	ADJ UNIT PRICE	LAND VALUE	OTHER ADJUSTMENTS AND NOTES	YEAR	DENSITY	DECL	FRZ	YR	CONSRV
1	0100	C	SFR	100		*RSF-2	0.00	0.00	1.00	LT		1.00	1.00	1.40	18,500.00	25,900.00	25,900							

REVIEW DATE 09/19/2016 BY DF Total Acres: 0.44 Total Land Value: 25,900 Market: 0 Agricultural: 0 Common: 25,900 PRINTED 08/01/2025 BY SYS