COMM AT NW COR OF NE1/4 OF NE1/4
ALSO SW COR OF LOT 4 BLK 12 LAKE
RUN THENCE W 283.64 FT TO E R/W

MILSTEIN JOSHUA ROBERT/MILSTEIN MELISSA MAIA
767 SW GRANDVIEW ST
LAKE CITY, FL 32025

2025

06-4S-17-07976-009

COLUMBIA COUNTY PROPERTY

BUILDING CHARACTERISTICS

ELEMENT	CD	CONSTRUCTION
Exterior Wall	32	HARDIE BRD 100
Roof Structur	03	GABLE/HIP 100
Roof Cover	03	COMP SHNGL 100
Interior Wall	05	DRYWALL 100
Interior Floo	14	CARPET 50
Interior Floo	15	HARDTILE 50
Air Condition	03	CENTRAL 100
Heating Type	04	AIR DUCTED 100
Bedrooms		3 100
Bathrooms		3 100
Frame	02	WOOD FRAME 100
Stories	1.	1. 100
Architectual	05	CONV 100
Units		0 100
Condition Adj	03	03 100
Kitchen Adjus	01	01 100
Quality	05	05

DOR CODE	0100	SINGLE FAMILY	
MAP NUM		MKT AREA	06
NEIGHBORHOOD/LOC	6417.0100	1.00/	

AREA TYPE	TOTAL GROSS AREA	PCT OF BASE	YEAR	TOT ADJ AREA	SUBAREA MARKET VALUE
BAS	1,972	100		1,972	191,448
FGR	528	55		290	28,154
FHS	668	60		401	38,930
FOP	120	30		36	3,495
FOP	210	30		63	6,116
FSP	144	40		58	5,631
PTO	396	5		20	1,942
USP	264	35		92	8,932
TOTALS	4,302			2,932	284,647

MARKET ADJUSTMENTS

TYPE	MDL	EFF. AREA	TOT ADJ PTS	EFF. BASE RATE	REPL. COST NEW	AYB	EYB	ECON	FNCT		NORM	% COND
0100	01	2,932	109.7250	122.89	360,313	2003	2003	0	0	0	21.00	79.00

1 SINGLE FAM 33% - 2025 Heated Area: 2640 HX Base Yr 2025

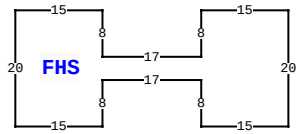

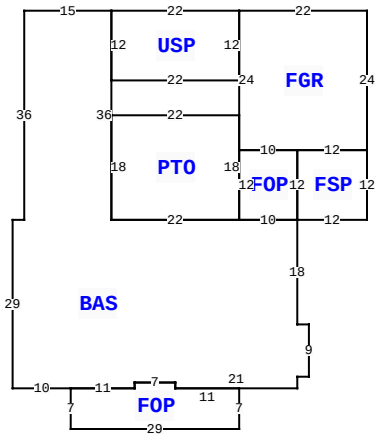

767 SW GRANDVIEW ST, LAKE CITY

BLD DATE		LGL DATE	
XF DATE		LAND DATE	
INC DATE		AG DATE	

VALUATION SUMMARY

VALUATION BY		STANDARD
Tax Group: 1	Tax Dist:	
BUILDING MARKET VALUE		284,647
TOTAL MARKET OB/XF VALUE		396
TOTAL LAND VALUE - MARKET		15,980
TOTAL MARKET VALUE		301,023
SOH/AGL Deduction		0
ASSESSED VALUE		301,023
TOTAL EXEMPTION VALUE	HA HAB	50,722
BASE TAXABLE VALUE		250,301
TOTAL JUST VALUE		301,023
NCON VALUE		0
INCOME VALUE		
PREVIOUS YEAR MKT VALUE		286,613

PERMIT NUM	DESCRIPTION	AMT	ISSUED
3734	ADDN SFR	50	05/12/2006

SALES DATA

OFF RECORD Number	DATE	TYPE INST	Q U	V I	RSN CD	SALE PRICE
1512/1086	4/12/2024	PB	U	I	18	0
GRANTOR: CLERK OF COURT (MILST						
GRANTEE: MILSTEIN JOSHUA ROB						
1422/2355	10/26/2020	WD	Q	I	01	215,000
GRANTOR: MICHAEL KOCH						
GRANTEE: DONALD & KAREN L MI						

BUILDING NOTES

BUILDING DIMENSIONS

BAS= W15 S36 W2 S29 E10 FOP= S7 E29 N7 W11 N1 W7 S1 W11$ E11 N1 E7 S1 E21 N2 E2 N9 W2 N18 FSP= E12 N12 W12 S12 $ FOP= N12 FGR= E12 N24 W22 USP= W22 S12 E22 N12$ S24 E10$ W10 S12 E10$ W10 PTO= N18 W22 S18 E22$ W22 N36$ PTR= N20 FHS= N20 W15 S8 W17 N8 W15 S20 E15 N8 E17 S8 E15$ S20$.

EXTRA FEATURES

LN	OB/XF CODE	DESCRIPTION	BLD	CAP	L	W	UNITS	UT	Adj R	ADJ UNIT PRICE	ORIG COND	YEAR ON	YEAR ACTUAL	Q	% COND	OB/XF MKT VALUE	NOTES
1	0166	CONC,PAVMT	0	33	3	33	198.00	UT	2.00	2.00	100	2003	2003	3	100	396	

LAND DESCRIPTION

TOTAL OB/XF 396

LN	USE CODE	CLS	LAND USE DESCRIPTION	CAP	RD	LOC ZONE	FRONT	DEPTH	TOT LND UTS	UNIT TYPE	DT	DPTH FACT	% COND	TOT ADJ	UNIT PRICE	ADJ UNIT PRICE	LAND VALUE	OTHER ADJUSTMENTS AND NOTES	YEAR	DENSITY	DECL	FRZ	YR	CONSRV
1	0100	C	SFR	33		RSF-2	0.00	0.00	0.94	AC		1.00	1.00	1.00	17,000.00	17,000.00	15,980							

REVIEW DATE 09/13/2016 BY DF Total Acres: 0.94 Total Land Value: 15,980 Market: 0 Agricultural: 0 Common: 15,980 PRINTED 08/18/2025 BY SYS