LOT 7 BLOCK 6 LAKE FOREST S/D UN
760-1946, 898-396, 898-1779, DC

SEGURA OSCAR OMAR/HARPER SHERIDAN S
589 SW SIESTA PL
LAKE CITY, FL 32025

2026

06-4S-17-07902-000

COLUMBIA COUNTY PROPERTY

BUILDING CHARACTERISTICS

ELEMENT	CD	CONSTRUCTION
Exterior Wall	19	COMMON BRK 60
Exterior Wall	05	AVERAGE 40
Roof Structur	03	GABLE/HIP 100
Roof Cover	03	COMP SHNGL 100
Interior Wall	01	MINIMUM 100
Interior Floo	01	NONE 50
Interior Floo	06	VINYL ASB 50
Air Condition	03	CENTRAL 100
Heating Type	04	AIR DUCTED 100
Bedrooms		4 100
Bathrooms		3.5 100
Frame	01	NONE 100
Stories	1.5	1.5 100
Architectual	05	CONV 100
Units		0 100
Condition Adj	01	01 100
Kitchen Adjus	01	01 100
Quality	04	04
DOR CODE	0100	SINGLE FAMILY
MAP NUM		MKT AREA 06
NEIGHBORHOOD/LOC	6417.0100	1.00/

AREA TYPE	TOTAL GROSS AREA	PCT OF BASE	YEAR	TOT ADJ AREA	SUBAREA MARKET VALUE
BAS	1,644	100		1,644	62,349
FOP	168	30		50	1,897
FSP	310	40		124	4,703
FUS	806	100		806	30,568
UST	180	45		81	3,072
TOTALS	3,108			2,705	102,587

MARKET ADJUSTMENTS

TYPE	MDL	EFF. AREA	TOT ADJ PTS	EFF. BASE RATE	REPL. COST NEW	AYB	EYB	ECON	FNCT	AP	NORM	% COND
0100	01	2,705	67.7215	75.85	205,174	1964	1964	0	0	15	35.00	50.00

2 SINGLE FAM 0% - 2024 Heated Area: 2450 HX Base Yr

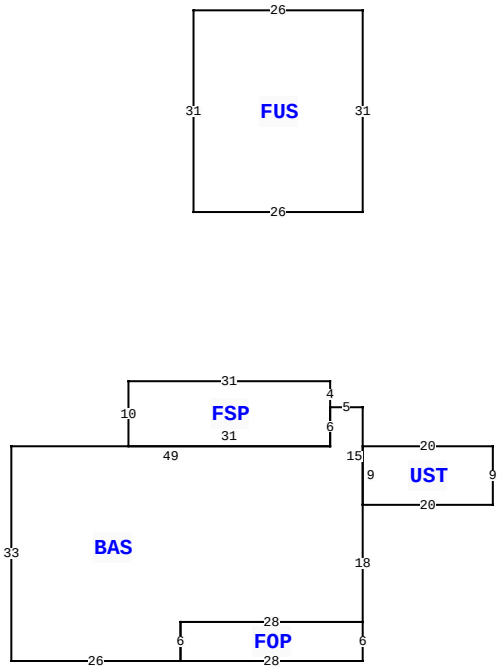

589 SW SIESTA PL, LAKE CITY

BLD DATE		LGL DATE	
XF DATE		LAND DATE	04/21/2023 MLU
INC DATE		AG DATE	

VALUATION SUMMARY

VALUATION BY	STANDARD
Tax Group: 1	Tax Dist:
BUILDING MARKET VALUE	102,587
TOTAL MARKET OB/XF VALUE	650
TOTAL LAND VALUE - MARKET	18,500
TOTAL MARKET VALUE	121,737
SOH/AGL Deduction	0
ASSESSED VALUE	121,737
TOTAL EXEMPTION VALUE	0
BASE TAXABLE VALUE	121,737
TOTAL JUST VALUE	121,737
NCON VALUE	0
INCOME VALUE	
PREVIOUS YEAR MKT VALUE	121,737

PERMIT NUM	DESCRIPTION	AMT	ISSUED
000045462	Roof Replacement	17,911	09/15/2022
3317	ADDN SFR	50	07/25/2005

SALES DATA

OFF RECORD Number	DATE	TYPE INST	Q U	V I	RSN CD	SALE PRICE
1505/241	12/20/2023	WD	Q	I	01	140,000
GRANTOR: BRUNS ALLISON						
GRANTEE: SEGURA OSCAR OMAR						
1445/1454	8/16/2021	WD	U	I	16	22,500
GRANTOR: REGISTER PRISCILLA DU						
GRANTEE: BRUNS ALLISON						

BUILDING NOTES

BUILDING DIMENSIONS

BAS= W5 FSP= N4 W31 S10 E31 N6$ S6 W49 S33 E26 FOP= E28 N6 W28 S6$ N6 E28 N18 UST= E20 N9 W20 S9$ N15 $ PTR=N30 FUS= N31W26 S31 E26$ S30$.

EXTRA FEATURES

LN	OB/XF CODE	DESCRIPTION	BLD	CAP	L	W	UNITS	UT	Adj R	ADJ UNIT PRICE	ORIG COND	YEAR ON	YEAR ACTUAL	Q	% COND	OB/XF MKT VALUE	NOTES
1	0166	CONC,PAVMT	0	0	0	0	1.00	UT	0.00	0.00	100	1993	1993	3	100	650	

LAND DESCRIPTION

TOTAL OB/XF 650

LN	USE CODE	CLS	LAND USE DESCRIPTION	CAP	RD	LOC ZONE	FRONT	DEPTH	TOT LND UTS	UNIT TYPE	DT	DPTH FACT	% COND	TOT ADJ	UNIT PRICE	ADJ UNIT PRICE	LAND VALUE	OTHER ADJUSTMENTS AND NOTES	YEAR	DENSITY	DECL	FRZ	YR	CONSRV
1	0100	C	SFR	0		*RSF-2	125.00	130.00	1.00	LT		1.00	1.00	1.00	18,500.00	18,500.00	18,500							

REVIEW DATE 12/27/2023 BY TP Total Acres: 0.37 Total Land Value: 18,500 Market: 0 Agricultural: 0 Common: 18,500 PRINTED 11/10/2025 BY SYS