THE S 523.67 FT OF SE1/4 OF SW1/
S 523.67 FT OF SW1/4 OF SE1/4 AS
DIRT RD RUNNING NW'LY THRU SW1/4

WARR JOHN L/WARR SANDRA S
6855 SW HERLONG ST
FT WHITE, FL 32038

2026

05-6S-16-03777-002

COLUMBIA COUNTY PROPERTY

BUILDING CHARACTERISTICS

ELEMENT	CD	CONSTRUCTION
Exterior Wall	19	COMMON BRK 100
Roof Structur	08	IRREGULAR 100
Roof Cover	03	COMP SHNGL 100
Interior Wall	05	DRYWALL 100
Interior Floo	15	HARDTILE 90
Interior Floo	08	SHT VINYL 10
Air Condition	03	CENTRAL 100
Heating Type	04	AIR DUCTED 100
Bedrooms		3 100
Bathrooms		2.5 100
Frame	02	WOOD FRAME 100
Stories	2.	2. 100
Architectual	05	CONV 100
Units		0 100
Condition Adj	03	03 100
Kitchen Adjus	01	01 100
Quality	07	07
DOR CODE	5000	IMPROVED AG
MAP NUM		MKT AREA 02
NEIGHBORHOOD/LOC	5616.00	1.00/

AREA TYPE	TOTAL GROSS AREA	PCT OF BASE	YEAR	TOT ADJ AREA	SUBAREA MARKET VALUE
BAS	1,538	100		1,538	186,962
FOP	603	30		181	22,003
FSP	479	40		192	23,340
FUS	512	100		512	62,239
TOTALS	3,132			2,423	294,545

MARKET ADJUSTMENTS

TYPE	MDL	EFF. AREA	TOT ADJ PTS	EFF. BASE RATE	REPL. COST NEW	AYB	EYB	ECON	FNCT		NORM	% COND
0100	01	2,423	142.8169	159.95	387,559	2001	2001	0	0	0	24.00	76.00

1 SINGLE FAM 100% - 2002 Heated Area: 2050 HX Base Yr 2002

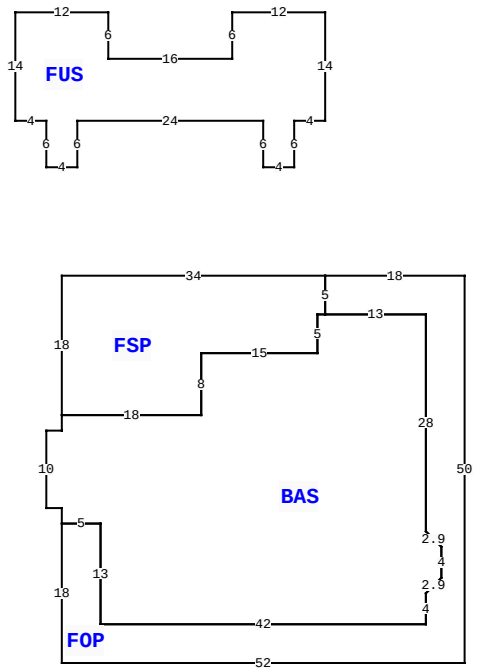

6855 SW HERLONG ST, FORT WHITE

BLD DATE		LGL DATE	
XF DATE		LAND DATE	04/08/2025 MLU
INC DATE		AG DATE	

VALUATION SUMMARY

VALUATION BY		STANDARD
Tax Group: 3	Tax Dist:	
BUILDING MARKET VALUE		294,545
TOTAL MARKET OB/XF VALUE		5,500
TOTAL LAND VALUE - MARKET		111,060
TOTAL MARKET VALUE		310,948
SOH/AGL Deduction		94,078
ASSESSED VALUE		216,870
TOTAL EXEMPTION VALUE	HX HB	50,722
BASE TAXABLE VALUE		166,148
TOTAL JUST VALUE		411,105
NCON VALUE		0
INCOME VALUE		
PREVIOUS YEAR MKT VALUE		414,980

PERMIT NUM	DESCRIPTION	AMT	ISSUED
000046839	Roof Replacement	48,659	03/28/2023
17661	SFR	365	11/20/2000
15403	PUMP/UTPOL	125	04/21/1999

SALES DATA

OFF RECORD Number	DATE	TYPE INST	Q U /	V I /	RSN CD	SALE PRICE
1498/716	8/23/2023	LE	U	I	14	100
GRANTOR: WARR JOHN L						
GRANTEE: WARR JOHN L (ENH LI						
0857/0149	4/17/1998	WD	Q	V		52,000
GRANTOR: MEADE						
GRANTEE: WARR						

BUILDING NOTES

BUILDING DIMENSIONS

FSP= W34 S18 E18 N8 E15 N5 E1 N5$ FOP= S5 BAS= W1 S5 W15 S8 W18 S2 W2 S10 E2 S2 E5 S13 E42 N4 R2 U2 N4 U2 L2 N28 W13$ E13 S28 R2 D2 S4 D2 L2 S4 W42 N13 W5 S18 E52 N50 W18$ PTR= N20 FUS= N14 W12 S6 W16 N6 W12 S14 E4 S6 E4 N6 E24 S6 E4 N6 E4$ S20$.

EXTRA FEATURES

LN	OB/XF CODE	DESCRIPTION	BLD	CAP	L	W	UNITS	UT	Adj R	ADJ UNIT PRICE	ORIG COND	YEAR ON	YEAR ACTUAL	Q	% COND	OB/XF MKT VALUE	NOTES
1	0040	BARN,POLE	0	100	24	40	1.00	UT	0.00	0.00	100	1999	1999	3	100	1,000	
2	0040	BARN,POLE	0	100	24	24	1.00	UT	0.00	0.00	100	1999	1999	3	100	600	
3	0190	FPLC PF	0	100	0	0	2.00	UT	1,200.00	1,200.00	100	2001	2001	3	100	2,400	
4	0070	CARPORT UF	0	100	0	0	1.00	UT	0.00	0.00	100	2015	2015	3	100	750	
5	0070	CARPORT UF	0	100	0	0	1.00	UT	0.00	0.00	100	2015	2015	3	100	750	

LAND DESCRIPTION

TOTAL OB/XF 5,500

LN	USE CODE	CLS	LAND USE DESCRIPTION	CAP	RD	LOC ZONE	FRONT	DEPTH	TOT LND UTS	UNIT TYPE	DT	DPTH FACT	% COND	TOT ADJ	UNIT PRICE	ADJ UNIT PRICE	LAND VALUE	OTHER ADJUSTMENTS AND NOTES	YEAR	DENSITY	DECL	FRZ	YR	CONSRV
1	0100	C	SFR	100		A-1	0.00	0.00	1.00	AC		1.00	1.00	1.00	6,000.00	6,000.00	6,000							
2	6200	A	PASTURE 3	0		A-1	0.00	0.00	17.51	AC		1.00	1.00	1.00	280.00	280.00	4,903							
3	9910	M	MKT.VAL.AG	0		A-1	0.00	0.00	17.51	AC		1.00	1.00	1.00	6,000.00	6,000.00	105,060							

REVIEW DATE 05/03/2023 BY jerry Total Acres: 18.51 Total Land Value: 10,903 Market: 105,060 Agricultural: 4,903 Common: 6,000 PRINTED 11/19/2025 BY SYS