LOT 36 HILLS AT ROSE CREEK S/D
PHASE 3.

HUSEBO BRIAN L/HUSEBO LISA R
151 SW OAK WAY
LAKE CITY, FL 32024

2026

05-5S-17-09116-136

COLUMBIA COUNTY PROPERTY

BUILDING CHARACTERISTICS

ELEMENT	CD	CONSTRUCTION
Exterior Wall	32	HARDIE BRD 100
Roof Structur	03	GABLE/HIP 100
Roof Cover	03	COMP SHNGL 100
Interior Wall	05	DRYWALL 100
Interior Floo	12	HARDWOOD 80
Interior Floo	15	HARDTILE 20
Air Condition	03	CENTRAL 100
Heating Type	04	AIR DUCTED 100
Bedrooms		5 100
Bathrooms		4 100
Frame	02	WOOD FRAME 100
Stories	1.	1. 100
Architectual	05	CONV 100
Units		0 100
Quality	06	06

DOR CODE 0100 SINGLE FAMILY
MAP NUM | MKT AREA 02
NEIGHBORHOOD/LOC 32417.00 1.00/

AREA TYPE	TOTAL GROSS AREA	PCT OF BASE	YEAR	TOT ADJ AREA	SUBAREA MARKET VALUE
BAS	3,269	100		3,269	355,876
FGR	672	55		370	40,280
FOP	108	30		32	3,483
FSP	414	40		166	18,072
TOTALS	4,463			3,837	417,711

MARKET ADJUSTMENTS

TYPE	MDL	EFF. AREA	TOT ADJ PTS	EFF. BASE RATE	REPL. COST NEW	AYB	EYB	ECON	FNCT		NORM	% COND
0100	01	3,837	115.7100	129.60	497,275	2009	2009	0	0	0	16.00	84.00

1 SINGLE FAM 100% - 2012 Heated Area: 3269 HX Base Yr 2012

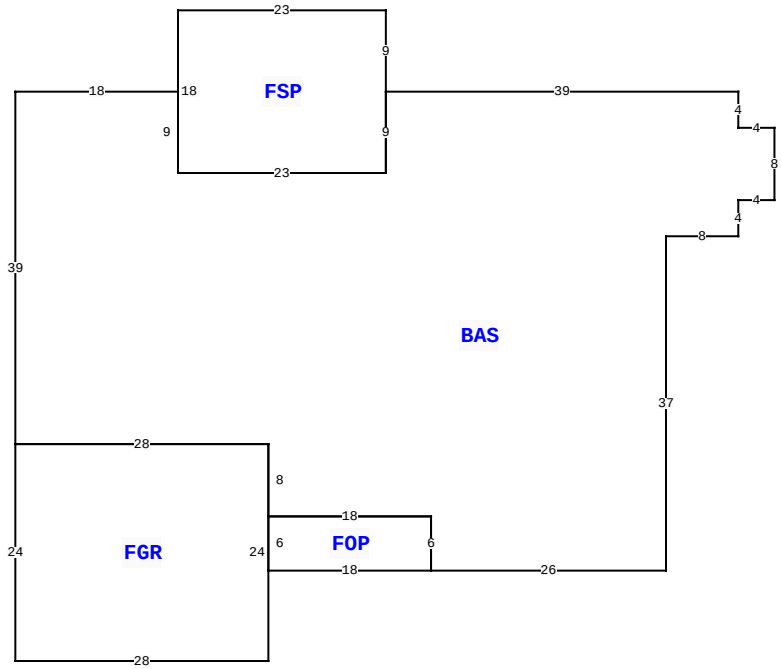

151 SW OAK WAY, LAKE CITY

BLD DATE		LGL DATE	
XF DATE		LAND DATE	04/21/2023 MLU
INC DATE		AG DATE	

VALUATION SUMMARY

VALUATION BY		STANDARD
Tax Group: 3	Tax Dist:	
BUILDING MARKET VALUE		417,711
TOTAL MARKET OB/XF VALUE		4,320
TOTAL LAND VALUE - MARKET		28,050
TOTAL MARKET VALUE		450,081
SOH/AGL Deduction		152,869
ASSESSED VALUE		297,212
TOTAL EXEMPTION VALUE	HX HB	50,722
BASE TAXABLE VALUE		246,490
TOTAL JUST VALUE		450,081
NCON VALUE		0
INCOME VALUE		
PREVIOUS YEAR MKT VALUE		455,054

PERMIT NUM	DESCRIPTION	AMT	ISSUED
27538	SFR	1,269	12/22/2008

SALES DATA

OFF RECORD Number	DATE	TYPE INST	Q U	V I	RSN CD	SALE PRICE
1219/2416	8/15/2011	WD	Q	I	01	220,000
GRANTOR: JOHN E & SHEILA B KRU						
GRANTEE: BRIAN L & LISA R HU						
1153/0203	7/18/2008	WD	Q	V		40,000
GRANTOR: QUY NGOC DOAN & PHEA						
GRANTEE: JOHN & SHEILA KRUSE						

BUILDING NOTES

BUILDING DIMENSIONS

BAS= W39 FSP= N9 W23 S18 E23 N9$ S9 W23 N9 W18 S39 FGR= S24 E28 N24 W28$ E28 S8 FOP= S6 E18 N6 W18$ E18 S6 E26 N37 E8 N4 E4 N8 W4 N4$.

EXTRA FEATURES

LN	OB/XF CODE	DESCRIPTION	BLD	CAP	L	W	UNITS	UT	Adj R	ADJ UNIT PRICE	ORIG COND	YEAR ON	YEAR ACTUAL	Q	% COND	OB/XF MKT VALUE	NOTES
1	0166	CONC,PAVMT	0	100	0	0	1,728.00	UT	2.50	2.50	100	2009	2009	3	100	4,320	

LAND DESCRIPTION

TOTAL OB/XF 4,320

LN	USE CODE	CLS	LAND USE DESCRIPTION	CAP	RD	LOC ZONE	FRONT	DEPTH	TOT LND UTS	UNIT TYPE	DT	DPTH FACT	% COND	TOT ADJ	UNIT PRICE	ADJ UNIT PRICE	LAND VALUE	OTHER ADJUSTMENTS AND NOTES	YEAR	DENSITY	DECL	FRZ	YR	CONSRV
1	0100	C	SFR	100		A-1	0.00	0.00	1.00	LT		1.00	1.00	0.51	55,000.00	28,050.00	28,050							

REVIEW DATE 07/20/2017 BY DF Total Acres: 2.20 Total Land Value: 28,050 Market: 0 Agricultural: 0 Common: 28,050 PRINTED 11/19/2025 BY SYS