LOT 7 BLOCK 4 LAKEWOOD S/D.
ORB 640-489,90, 772-2169

MANN MARK ROBERT
222 SE LAKEWOOD LN
LAKE CITY, FL 32025-6731

2026

05-4S-17-07813-000

BUILDING CHARACTERISTICS

ELEMENT	CD	CONSTRUCTION
Exterior Wall	06	BD/BATTEN 100
Roof Structur	02	SHED 100
Roof Cover	04	BUILT-UP 100
Interior Wall	04	PLYWOOD 100
Interior Floo	14	CARPET 90
Interior Floo	06	VINYL ASB 10
Air Condition	03	CENTRAL 100
Heating Type	04	AIR DUCTED 100
Bedrooms		3 100
Bathrooms		1.5 100
Frame	01	NONE 100
Stories	1.	1. 100
Architectual	05	CONV 100
Units		0 100
Condition Adj	03	03 100
Kitchen Adjus	01	01 100
Quality	05	05
DOR CODE	0100	SINGLE FAMILY
MAP NUM		MKT AREA 06
NEIGHBORHOOD/LOC	5417.0500	1.00/

AREA TYPE	TOTAL GROSS AREA	PCT OF BASE	YEAR	TOT ADJ AREA	SUBAREA MARKET VALUE
BAS	2,186	100		2,186	153,613
FOP	66	30		20	1,405
UDC	465	25		116	8,152
UST	85	45		38	2,670
TOTALS	2,802			2,360	165,841

MARKET ADJUSTMENTS

TYPE	MDL	EFF. AREA	TOT ADJ PTS	EFF. BASE RATE	REPL. COST NEW	AYB	EYB	ECON	FNCT		NORM	% COND
0100	01	2,360	96.5250	108.11	255,140	1960	1965	0	0	0	35.00	65.00

1 SINGLE FAM 100% - 2016 Heated Area: 2186 HX Base Yr 2016

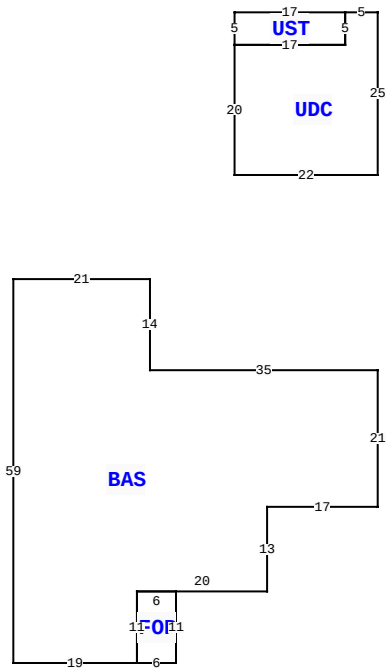

222 SE LAKEWOOD LN, LAKE CITY

BLD DATE		LGL DATE	
XF DATE		LAND DATE	04/27/2022 MLU
INC DATE		AG DATE	

EXTRA FEATURES

LN	OB/XF CODE	DESCRIPTION	BLD	CAP	L	W	UNITS	UT	Adj R	ADJ UNIT PRICE	ORIG COND	YEAR ON	YEAR ACTUAL	Q	% COND	OB/XF MKT VALUE	NOTES
1	0258	PATIO	0	100	0	0	1.00	UT	0.00	0.00	100	0	0	3	100	100	
2	0120	CLFENCE 4	0	100	0	0	1.00	UT	0.00	0.00	100	2012	2012	3	100	200	

COLUMBIA COUNTY PROPERTY

PAGE 1 of 1 1

VALUATION SUMMARY

VALUATION BY		STANDARD
Tax Group: 1	Tax Dist:	
BUILDING MARKET VALUE		165,841
TOTAL MARKET OB/XF VALUE		300
TOTAL LAND VALUE - MARKET		12,825
TOTAL MARKET VALUE		178,966
SOH/AGL Deduction		112,957
ASSESSED VALUE		66,009
TOTAL EXEMPTION VALUE	HX HB	41,009
BASE TAXABLE VALUE		25,000
TOTAL JUST VALUE		178,966
NCON VALUE		0
INCOME VALUE		
PREVIOUS YEAR MKT VALUE		178,966

SALE:1:1: LOT 7 BLK 4 LAKEWOOD

PERMIT NUM	DESCRIPTION	AMT	ISSUED

SALES DATA

OFF RECORD Number	DATE	TYPE INST	Q U	V I	RSN CD	SALE PRICE
0772/2169	3/31/1993	WD	Q	I	03	63,000
GRANTOR: ROBERT C MANN						
GRANTEE: MARK ROBERT MANN						
0640/0489	12/24/1987	WD	U	I		53,000
GRANTOR: BREZA H MICHAEL						
GRANTEE: MANN ROBERT C &						

BUILDING NOTES

BUILDING DIMENSIONS

BAS= W35 N14 W21 S59 E19 FOP= E6 N11 W6 S11$ N11 E20 N13 E17 N21$ PTR=N30 UDC= N25W5 UST= W17 S5 E17 N5$ S5 W17 S20 E22$ S30$.

LAND DESCRIPTION

TOTAL OB/XF 300

LN	USE CODE	CLS	LAND USE DESCRIPTION	CAP	RD	LOC ZONE	FRONT	DEPTH	TOT LND UTS	UNIT TYPE	DT	DPTH FACT	% COND	TOT ADJ	UNIT PRICE	ADJ UNIT PRICE	LAND VALUE	OTHER ADJUSTMENTS AND NOTES	YEAR	DENSITY	DECL	FRZ	YR	CONSRV
1	0100	C	SFR	100		*RSF	-290.00	150.00	13,500.00	SF		1.00	1.00	1.00	0.95	0.95	12,825							

REVIEW DATE 10/03/2016 BY DF Total Acres: 0.31 Total Land Value: 12,825 Market: 0 Agricultural: 0 Common: 12,825 PRINTED 11/07/2025 BY SYS