COMM SW COR OF NW1/4, RUN N
976.20 FT, E 611.60 FT N 100.0
FT TO POB, CONT N 153.32 FT E

GARDEN MAZE INC
186 NW SILVER GLEN
LAKE CITY, FL 32055

2026

05-4S-17-07648-000

BUILDING CHARACTERISTICS

ELEMENT	CD	CONSTRUCTION
Exterior Wall	16	WD FR STUC 70
Exterior Wall	31	VINYL SID 30
Roof Structur	04	WOOD TRUSS 100
Roof Cover	03	COMP SHNGL 100
Interior Wall	05	DRYWALL 100
Interior Floo	07	CORK/VTILE 90
Interior Floo	14	CARPET 10
Ceiling	02	F.NOT SUS 100
Air Condition	03	CENTRAL 100
Heating Type	04	AIR DUCTED 100
Fixtures		14 100
Frame	02	WOOD FRAME 100
Story Height		8 100
RMS		10 100
Stories	1.	1. 100
Units		0 100
Condition Adj	03	03 100
Quality	06	06
DOR CODE	7200	PRVT SCHL/DAY CARE
MAP NUM		MKT AREA 06
NEIGHBORHOOD/LOC	5417.00	1.00/

AREA TYPE	TOTAL GROSS AREA	PCT OF BASE	YEAR	TOT ADJ AREA	SUBAREA MARKET VALUE
BAS	540	100		540	17,464
BAS	1,860	100		1,860	60,153
BAS	3,066	100		3,066	99,155
CAN	40	30		12	388
CAN	56	30		17	550
CAN	1,068	30		320	10,349
TOTALS	6,630			5,815	188,057

MARKET ADJUSTMENTS

TYPE	MDL	EFF. AREA	TOT ADJ PTS	EFF. BASE RATE	REPL. COST NEW	AYB	EYB	ECON	FNCT		NORM	% COND
0700	04	5,815	98.0074	64.68	376,114	1950	1985	0	0	0	50.00	50.00

1 DAY CARE 0% - 0 Heated Area: 5466 HX Base Yr

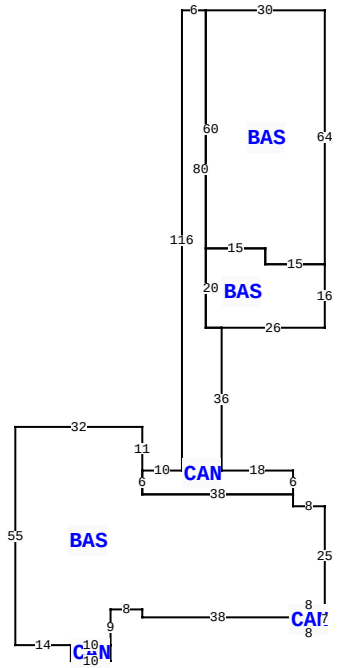

1126 SW MAIN BLVD, LAKE CITY

BLD DATE		LGL DATE	
XF DATE		LAND DATE	04/27/2022 MLU
INC DATE		AG DATE	

COLUMBIA COUNTY PROPERTY

PAGE 1 of 1 1

VALUATION SUMMARY

VALUATION BY	STANDARD
Tax Group: 1	Tax Dist:
BUILDING MARKET VALUE	188,057
TOTAL MARKET OB/XF VALUE	17,636
TOTAL LAND VALUE - MARKET	260,535
TOTAL MARKET VALUE	466,228
SOH/AGL Deduction	0
ASSESSED VALUE	466,228
TOTAL EXEMPTION VALUE	0
BASE TAXABLE VALUE	466,228
TOTAL JUST VALUE	466,228
NCON VALUE	0
INCOME VALUE	
PREVIOUS YEAR MKT VALUE	466,228

SALE:2:1: OLD HOUSE REMODELED INTO NURSERY AFTER S
SALE:1:1: GRANTORS ARE OWNERS OF GREEN ACRES
BLDG:1:1: RSH COMPLETELY REMODLED TO DAY CARE 1997

PERMIT NUM	DESCRIPTION	AMT	ISSUED
23-249	REROOF-ASP SHINGL		11/17/2023
546	ADDN COMM	120	02/20/2008
1004	COMMERCIAL	375	06/26/1997

SALES DATA

OFF RECORD Number	DATE	TYPE INST	Q U	V I	RSN CD	SALE PRICE
1120/1785	6/01/2007	WD	Q	I		647,500
GRANTOR: GREEN ACRES LEARNING						
GRANTEE: GARDEN MAZE INC						
0851/0230	8/15/1997	WD	Q	I	01	119,900
GRANTOR: JOHN W & DANETTE O'NE						
GRANTEE: GREEN ACRES LEARNIN						

BUILDING NOTES

BUILDING DIMENSIONS

BAS= W30 CAN= W6 S116 W10 BAS= N11 W32 S55 E14 CAN= S4E10 N4 W10$ E10 N9 E8 S2 E38 CAN= S4 E8 N7 W8 S3$ N3 E8 N25 W8 N3 W38 N6$ S6 E38 N6 W18 N36 BAS= E26 N16 W15 N4 W15 S20 E4$ W4 N80$ S60 E15 S4E15 N64$.

EXTRA FEATURES

LN	OB/XF CODE	DESCRIPTION	BLD	CAP	L	W	UNITS	UT	Adj R	ADJ UNIT PRICE	ORIG COND	YEAR ON	YEAR ACTUAL	Q	% COND	OB/XF MKT VALUE	NOTES
1	0166	CONC,PAVMT	0	0	0	0	2,945.00	UT	2.00	2.00	100	1997	1997	3	100	5,890	
2	0120	CLFENCE 4	0	0	0	0	221.00	UT	2.50	2.50	100	1997	1997	3	100	553	
3	0130	CLFENCE 5	0	0	0	0	75.00	UT	3.00	3.00	100	1997	1997	3	100	225	
4	0140	CLFENCE 6	0	0	0	0	763.00	UT	3.50	3.50	100	1997	1997	3	100	2,671	
5	0260	PAVEMENT-A	0	0	0	0	10,775.00	UT	0.77	0.77	100	1997	1997	3	100	8,297	

LAND DESCRIPTION

TOTAL OB/XF 17,636

LN	USE CODE	CLS	LAND USE DESCRIPTION	CAP	RD	LOC ZONE	FRONT	DEPTH	TOT LND UTS	UNIT TYPE	DT	DPTH FACT	% COND	TOT ADJ	UNIT PRICE	ADJ UNIT PRICE	LAND VALUE	OTHER ADJUSTMENTS AND NOTES	YEAR	DENSITY	DECL	FRZ	YR	CONSRV
1	7200	C	SCHOOL PRI	0		CG	177.00	250.00	53,530.00	SF		1.00	1.00	1.00	4.50	4.50	240,885							
2	7200	C	SCHOOL PRI	0		CG	0.00	0.00	19,650.00	SF		1.00	1.00	1.00	1.00	1.00	19,650							

REVIEW DATE 09/28/2016 BY DF Total Acres: 1.68 Total Land Value: 260,535 Market: 0 Agricultural: 0 Common: 260,535 PRINTED 11/17/2025 BY SYS