LOT 9 BLK D MARION PLACE S/D PHA
WD 1216-2594, PB 1423-2147, WD 1

PARISH TERRY G/PARISH FRANCES S
736 SHEPPARD ROAD
REHOBETH, AL 36301

2026

05-4S-17-07610-409

COLUMBIA COUNTY PROPERTY

BUILDING CHARACTERISTICS

ELEMENT	CD	CONSTRUCTION
Exterior Wall	19	COMMON BRK 100
Roof Structur	03	GABLE/HIP 100
Roof Cover	03	COMP SHNGL 100
Interior Wall	05	DRYWALL 100
Interior Floo	14	CARPET 80
Interior Floo	15	HARDTILE 20
Air Condition	03	CENTRAL 100
Heating Type	04	AIR DUCTED 100
Bedrooms		2 100
Bathrooms		2 100
Frame	02	WOOD FRAME 100
Stories	1.	1. 100
Architectual	05	CONV 100
Units		0 100
Quality	06	06

DOR CODE 0100 SINGLE FAMILY
MAP NUM | MKT AREA 06
NEIGHBORHOOD/LOC 5417.00 1.00/

AREA TYPE	TOTAL GROSS AREA	PCT OF BASE	YEAR	TOT ADJ AREA	SUBAREA MARKET VALUE
BAS	1,351	100		1,351	162,323
FGR	322	55		177	21,267
FOP	210	30		63	7,570
FSP	267	40		107	12,856
TOTALS	2,150			1,698	204,016

MARKET ADJUSTMENTS

TYPE	MDL	EFF. AREA	TOT ADJ PTS	EFF. BASE RATE	REPL. COST NEW	AYB	EYB	ECON	FNCT		NORM	% COND
0100	01	1,698	124.7400	139.71	237,228	2011	2011	0	0	0	14.00	86.00

1 SINGLE FAM 0% - 2021 Heated Area: 1351 HX Base Yr

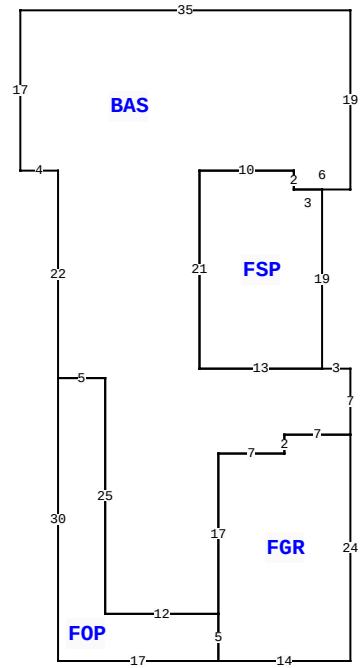

1696 SW PALOMA CT, LAKE CITY

BLD DATE		LGL DATE	
XF DATE		LAND DATE	04/21/2023 MLU
INC DATE		AG DATE	

VALUATION SUMMARY

VALUATION BY	STANDARD
Tax Group: 1	Tax Dist:
BUILDING MARKET VALUE	204,016
TOTAL MARKET OB/XF VALUE	6,100
TOTAL LAND VALUE - MARKET	18,500
TOTAL MARKET VALUE	228,616
SOH/AGL Deduction	0
ASSESSED VALUE	228,616
TOTAL EXEMPTION VALUE	0
BASE TAXABLE VALUE	228,616
TOTAL JUST VALUE	228,616
NCON VALUE	0
INCOME VALUE	
PREVIOUS YEAR MKT VALUE	231,288

PERMIT NUM	DESCRIPTION	AMT	ISSUED
473	SFR	474	01/14/2008

SALES DATA

OFF RECORD Number	DATE	TYPE INST	Q U /	V I /	RSN CD	SALE PRICE
1424/1008	11/18/2020	WD	Q	I	01	190,000
GRANTOR: DEBBIE PHARO MORRISON						
GRANTEE: TERRY G & FRANCES S						
1423/2147	11/09/2020	PB	U	I	18	0
GRANTOR: CLERK OF COURT (THOMA						
GRANTEE: DEBBIE PHARO MORRIS						

BUILDING NOTES

BUILDING DIMENSIONS

BAS= W35 S17 E4 S22 FOP= S30 E17 N5 W12 N25 W5$ E5 S25 E12
FGR= S5 E14 N24 W7 S2 W7 S17$ N17 E7 N2 E7 N7 W3 FSP= N19 W3
N2 W10 S21 E13$ W13 N21 E10 S2 E6 N19$.

EXTRA FEATURES

LN	OB/XF CODE	DESCRIPTION	BLD	CAP	L	W	UNITS	UT	Adj R	ADJ UNIT PRICE	ORIG COND	YEAR ON	YEAR ACTUAL	Q	% COND	OB/XF MKT VALUE	NOTES
1	0166	CONC,PAVMT	0	0	0	0	350.00	UT	2.00	2.00	100	2011	2011	3	100	700	
2	0104	GENERATOR	0	0	0	0	1.00	UT	6,000.00	6,000.00	100	2025	2024		90	5,400	

LAND DESCRIPTION

TOTAL OB/XF 6,100

LN	USE CODE	CLS	LAND USE DESCRIPTION	CAP	RD	LOC ZONE	FRONT	DEPTH	TOT LND UTS	UNIT TYPE	DT	DPTH FACT	% COND	TOT ADJ	UNIT PRICE	ADJ UNIT PRICE	LAND VALUE	OTHER ADJUSTMENTS AND NOTES	YEAR	DENSITY	DECL	FRZ	YR	CONSRV
1	0100	C	SFR	0			42.00	104.00	1.00	LT		1.00	1.00	1.00	18,500.00	18,500.00	18,500							

REVIEW DATE 10/17/2024 BY TW Total Acres: 0.10 Total Land Value: 18,500 Market: 0 Agricultural: 0 Common: 18,500 PRINTED 11/10/2025 BY SYS