BEG NE COR OF NW1/4 OF SW1/4,
RUN E 181.45 FT, S 835.26 FT
TO N LINE SUGAR CREEK, W ALONG

SOUTH TOWN SQUARE LLC
P O BOX 2095
LAKE CITY, FL 32056

2026

05-4S-17-07610-002

BUILDING CHARACTERISTICS

ELEMENT	CD	CONSTRUCTION
Exterior Wall	15	CONC BLOCK 100
Roof Structur	09	RIDGE FRME 100
Roof Cover	04	BUILT-UP 100
Interior Wall	05	DRYWALL 100
Interior Floo	14	CARPET 80
Interior Floo	06	VINYL ASB 20
Ceiling	01	FIN.SUSPD 100
Air Condition	06	ENG CENTRL 100
Heating Type	09	ENG F AIR 100
Fixtures		53 100
Frame	03	MASONRY 100
Story Height		20 100
RMS		35 100
Stories	1.	1. 100
Units		0 100
Condition Adj	03	03 100
Quality	03	03
DOR CODE	1600	COMMUNITY SHOPPING
MAP NUM		MKT AREA 06
NEIGHBORHOOD/LOC	5417.00	1.00/

AREA TYPE	TOTAL GROSS AREA	PCT OF BASE	YEAR	TOT ADJ AREA	SUBAREA MARKET VALUE
BAS	1,320	100		1,320	20,782
BAS	1,360	100		1,360	21,412
BAS	1,480	100		1,480	23,301
BAS	2,000	100		2,000	31,488
BAS	2,584	100		2,584	40,682
BAS	4,624	100		4,624	72,800
BAS	4,624	100		4,624	72,800
BAS	5,285	100		5,285	83,207
BAS	5,830	100		5,830	91,787
BAS	13,872	100		13,872	218,401
TOTALS	78,047			69,491	1,094,066

MARKET ADJUSTMENTS

TYPE	MDL	EFF. AREA	TOT ADJ PTS	EFF. BASE RATE	REPL. COST NEW	AYB	EYB	ECON	FNCT	AP	NORM	% COND
3800	04	69,491	82.0034	52.48	3,646,888	1975	1975	0	0	20	50.00	30.00

1 SHOP NBHD 0% - 0 Heated Area: 63117 HX Base Yr

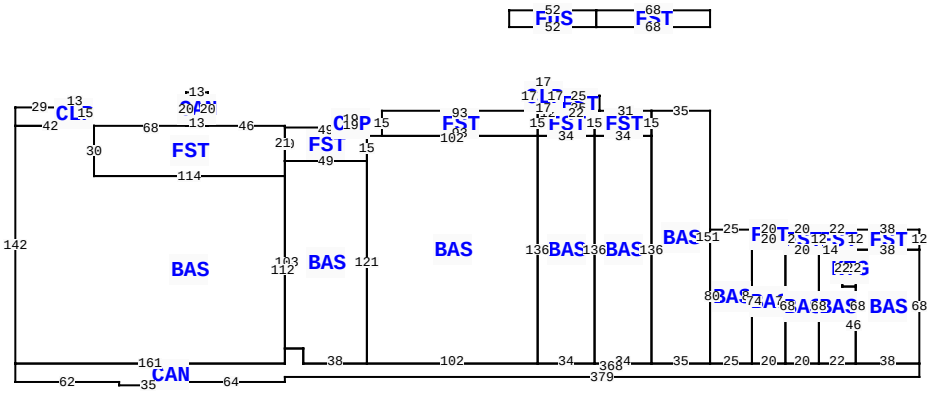

** This building has 29 Sub-Areas

1489 SW MAIN BLVD, LAKE CITY

BLD DATE		LGL DATE	
XF DATE		LAND DATE	
INC DATE		AG DATE	

COLUMBIA COUNTY PROPERTY

PAGE 1 of 1 1

VALUATION SUMMARY

VALUATION BY	STANDARD
Tax Group: 1	Tax Dist:
BUILDING MARKET VALUE	1,094,066
TOTAL MARKET OB/XF VALUE	45,607
TOTAL LAND VALUE - MARKET	598,320
TOTAL MARKET VALUE	1,737,993
SOH/AGL Deduction	0
ASSESSED VALUE	1,737,993
TOTAL EXEMPTION VALUE	0
BASE TAXABLE VALUE	1,737,993
TOTAL JUST VALUE	1,737,993
NCON VALUE	0
INCOME VALUE	
PREVIOUS YEAR MKT VALUE	1,737,993

BLDG:3:1: CHRISTAIN BOOK STORE , GYM , STORAGE FOR

BLDG:2:1: ECKERDS

PERMIT NUM	DESCRIPTION	AMT	ISSUED
000047323	Signs - New or Ex	20,000	05/25/2023
000046318	Remodel	1,400,000	01/20/2023
1061	MAINT/ALTR	795	11/12/2008
3426	REMODEL	98	09/26/2005
3356	REMODEL	323	08/22/2005
3139	REMODEL	120	12/15/2004

SALES DATA

OFF RECORD Number	DATE	TYPE INST	Q / U	V / I	RSN CD	SALE PRICE
1140/0691	12/31/2007	TR	Q	I	01	100
GRANTOR: PATRICIA FAYE BORIS T						
GRANTEE: SOUTH TOWN SQUARE L						
1120/0405	5/16/2007	WD	Q	I	01	100
GRANTOR: PATRICIA FAYE BORIS (						
GRANTEE: PATRICIA FAYE BORIS						

BUILDING NOTES

BUILDING DIMENSIONS

BAS= W35 FST= W31 FST= N9 W25 S9 E25$ W3 S15 E34 N15$ S15 BAS= W34 FST= N15W22 CLP= N17 W17 S17 E17$ W12 S15E34$ BAS= W34 FST= N15 W93 S15 E93$ BAS= W102 FST= N5 CLP= N5 W19 S5 E19$ W49 S20 E49 N15 $ S15 BAS= W49 FST= N21 W46 CAN= N20 W13 S20 E13$W68 S30 E114 N9$ S9 BAS= W114 N30 W5 CLP= N15 W13 S4 W29 S11 E42 $ W42 S142 CAN= S11 E62 S2 E35 N2 E64 N3 E379 N8 W368 N9 W11 S9 W161$ E161 N112$ S103 E11 S9 E38 N121$ S121 E102 N136$ S136 E34 N136$S136 E34 N136$ S136 E35 BAS= E25 BAS= E20 BAS= E20 BAS= E22 BAS= E38 N68 FST= N12 W38 S12 E38$ W38 S68$ N46 KTG= N22 W8 S22 E8 $ W8 N22 FST= E8 N12 W22 S12 E14$ W14 S68$ N68 FST= N12 W20 S12 E20$ W20 S68$ N74 FST= N6 W20 S6E20$ W20 S74$ N80 W25 S80$ N151$ PTR= N50 FST= N10 W68

EXTRA FEATURES

LN	OB/XF CODE	DESCRIPTION	BLD	CAP	L	W	UNITS	UT	Adj R	ADJ UNIT PRICE	ORIG COND	YEAR ON	YEAR ACTUAL	Q	% COND	OB/XF MKT VALUE	NOTES
1	0260	PAVEMENT-A	0	0	0	0	231,150.00	UT	0.90	0.90	20	1975	1975	3	20	41,607	
2	0253	LIGHTING	0	0	0	0	4.00	UT	1,000.00	1,000.00	100	2003	2003	3	100	4,000	

LAND DESCRIPTION

TOTAL OB/XF 45,607

LN	USE CODE	CLS	LAND USE DESCRIPTION	CAP	RD	LOC ZONE	FRONT	DEPTH	TOT LND UTS	UNIT TYPE	DT	DPTH FACT	% COND	TOT ADJ	UNIT PRICE	ADJ UNIT PRICE	LAND VALUE	OTHER ADJUSTMENTS AND NOTES	YEAR	DENSITY	DECL	FRZ	YR	CONSRV
1	1600	C	SH CTR COM	0		00	656.00	440.00	7.48	AC		1.00	1.00	1.00	80,000.00	80,000.00	598,320							

REVIEW DATE 09/29/2016 BY DF Total Acres: 7.48 Total Land Value: 598,320 Market: 0 Agricultural: 0 Common: 598,320 PRINTED 11/05/2025 BY SYS